Heritage Window and Door

Combatting Air and Water Infiltration.

The Importance of Installation on Energy Efficient Windows

1. Describe three common pitfalls of typical window installations.

2. Explain how water gets into walls via rough openings, despite good windows.

3. Explain how testing mock-ups to failure as opposed to ASTM standards benefits the construction process.

4. Compare and contrast self-adhered flashings and fluid-applied flashing systems.

Learning Objectives

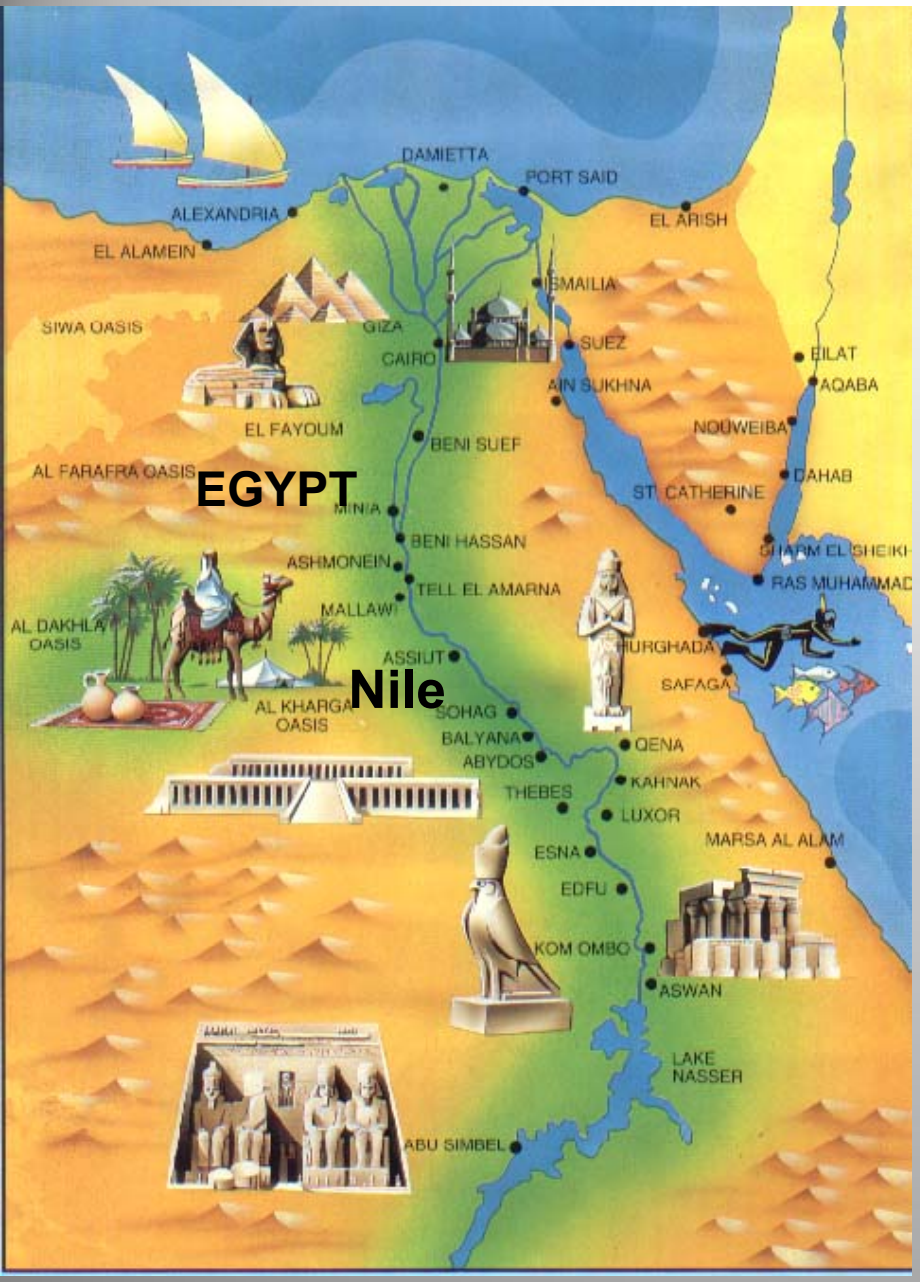

U.S EPA's BASE study of 100 randomly selected U.S. office buildings found that 43% of the buildings had current water leaks, and 85% experienced previous water leaks.

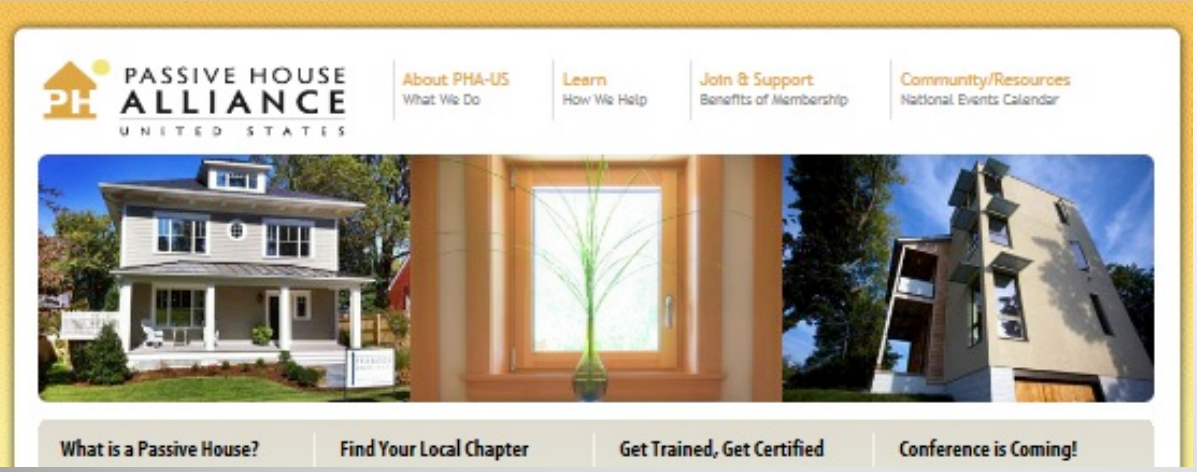

High-end custom homes

Extreme energy efficiency

US Army Corps of Engineers

200-year home

Air Changes per Hour @ 50 Pascals = 20mph wind

Energy Star	**4.0** ACH (Zone 6)
IECC	**3.0** ACH
Passive House	**0.6** ACH
Sheetwrap/Peel&Stick	**7.01** ACH
Fluid applied	**0.17** ACH

Karuna Passive House

0.42 ACH BEFORE air sealing completed

Hammer & Hand

First commercial Passive House retrofit – restaurant & apartment – Hammer & Hand

Passive House

- Super energy-efficient for minimum utility bills
- Water-tight
- Draft-free, uniform temperature
- Very quiet
- Allergen-proofed
- Government financial incentives
- Environmental leadership
- Increased market value
- Most Durable, Highest-Quality Construction

Liquid detailing membrane

Age: 3 years

Project Owner
Seattle Heights Homeowner's Association

Project Architect:
Simpson Gumpertz & Heger Inc.

Project Size:
$9,500,000 Exterior
$2,500,000 Interior

Liquid detailing membrane

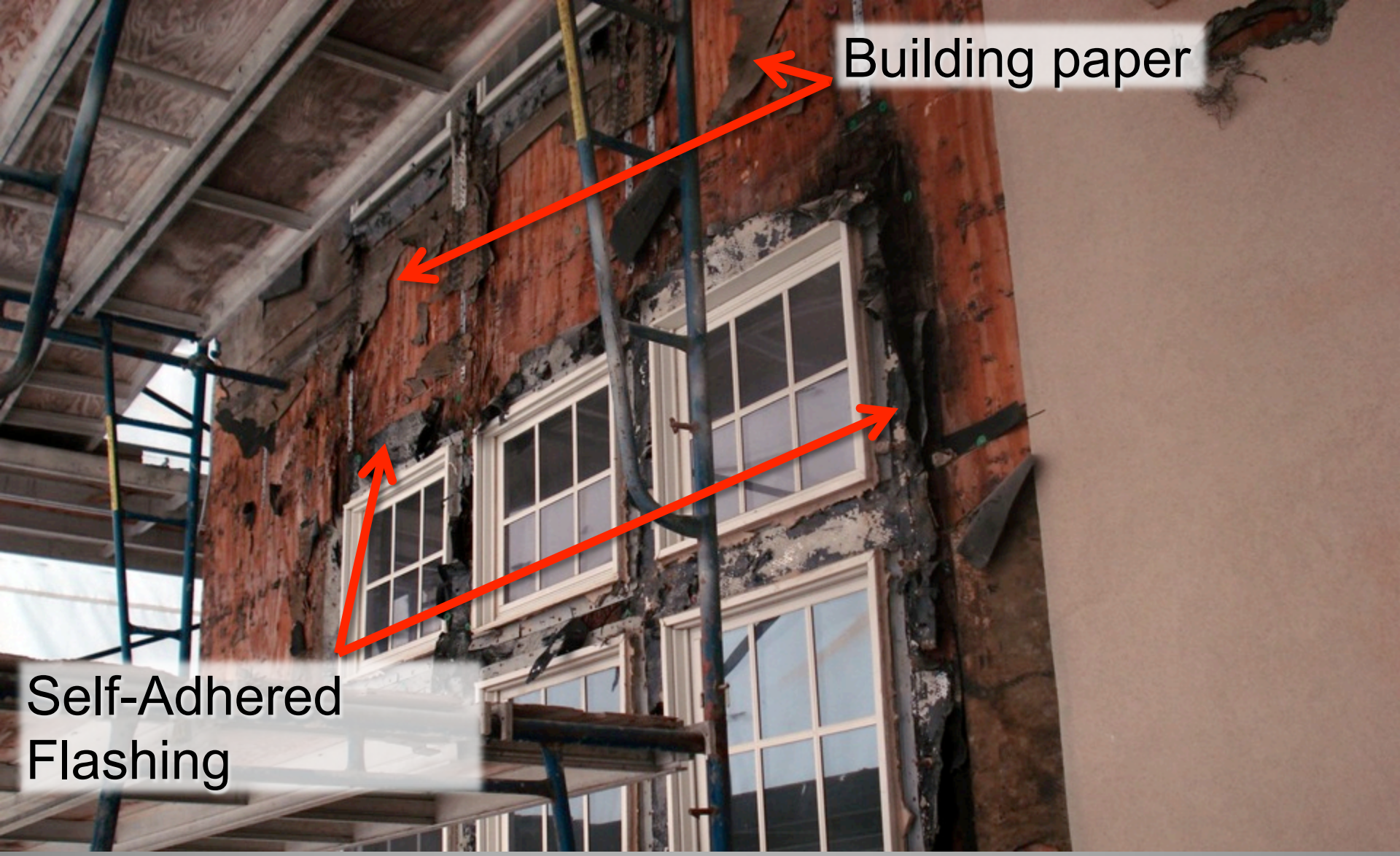

Liquid detailing membrane

Liquid detailing membrane

Liquid detailing membrane

Liquid detailing membrane

Lawrence Chamber

LDVTC - Fixed Chamber - Lawrence, KS

7’ x 7’ test wall

Liquid detailing membrane

Tests Performed
in the
Transportable Verification Chamber

- ASTM E-2357 Style WRB and Building Detail Test.
- ASTM E-283 Air Leakage.
- ASTM E-783 Air Leakage.
- ASTM E-330 Structural.
- AC212 Style Racking Test.
- AC212 Style WRB Test.
- ASTM E-1677 Air Retarder.
- ASTM E2178 Air Permanence.

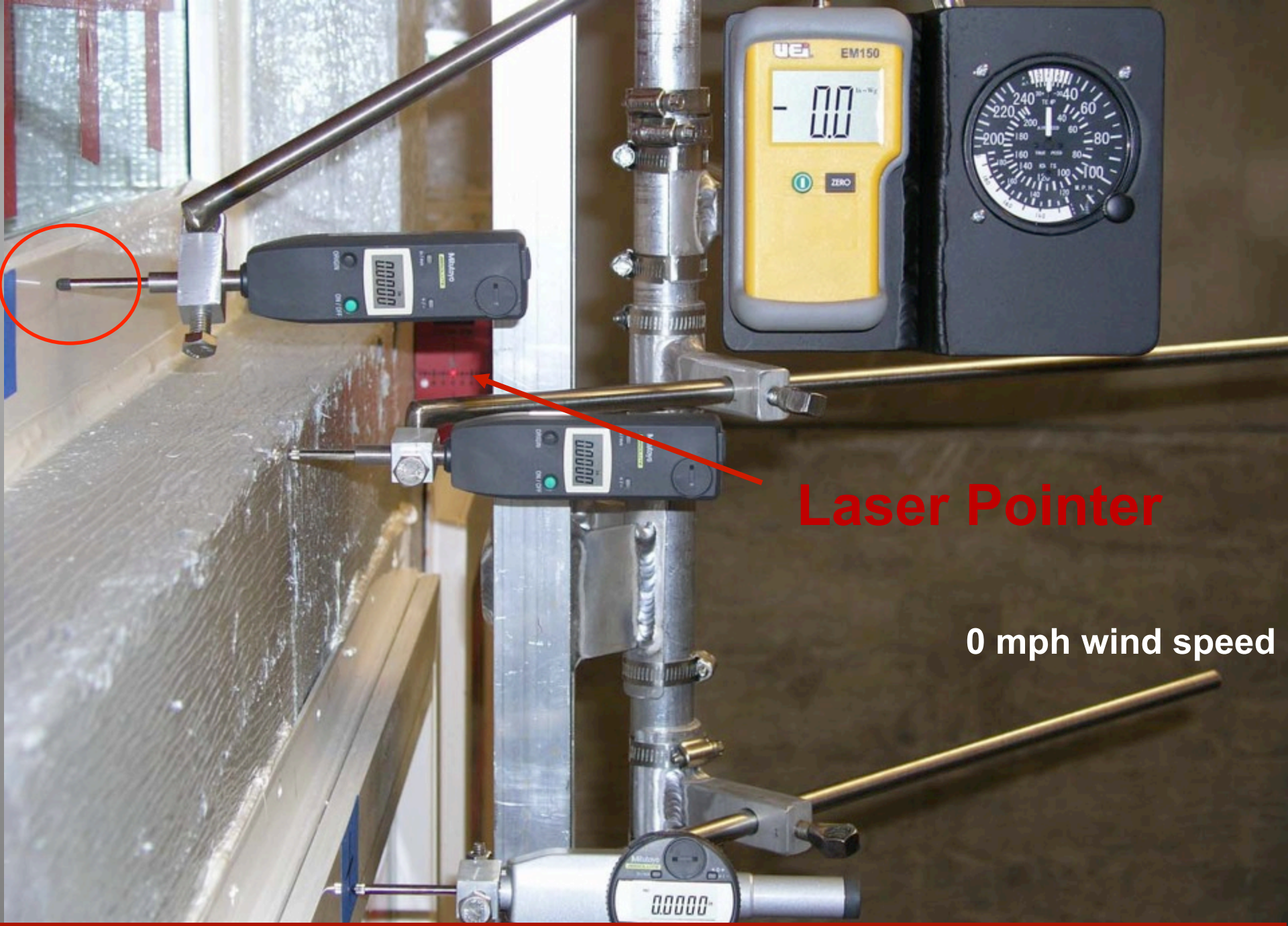

Liquid detailing membrane

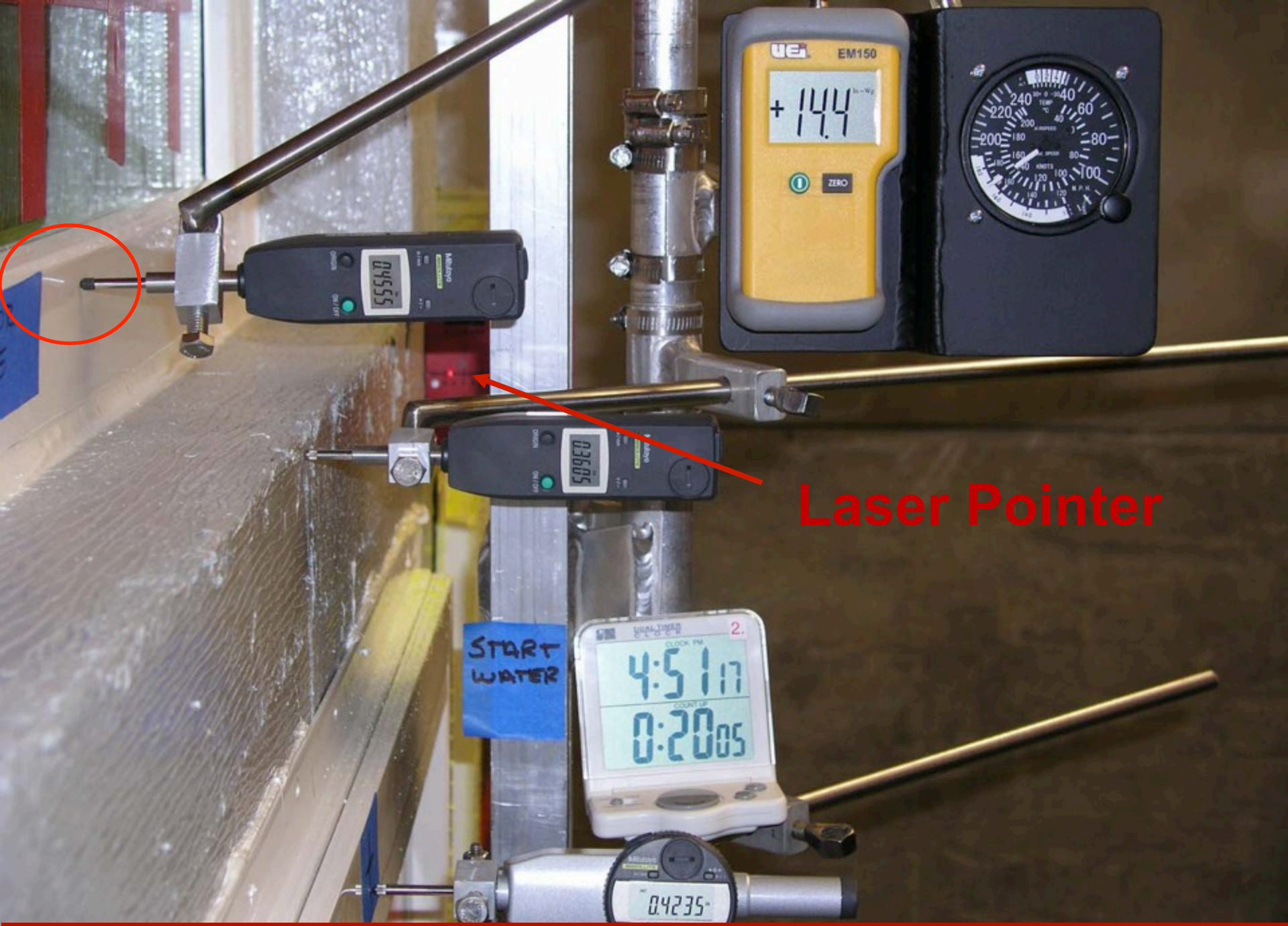

Liquid detailing membrane

- Products on the market found lacking when tested to rough-weather levels of simulated wind-driven rain

- Developed STPE products in response

Product Wish List

- ✓Fluid applied
- ✓**Bonds to wet surfaces**
- ✓Adheres without a primer
- ✓100% solids to avoid shrinkage
- ✓VOC Compliant – minimal odor
- ✓**Immediately waterproof – withstands rain**
- ✓Opaque when target thickness is achieved
- ✓Can be exposed for up to 6 months
- ✓Paintable / compatible
- ✓Vapor permeable
- ✓Reduces steps/saves time
- ✓Easily repaired
- ✓Self seals around fasteners

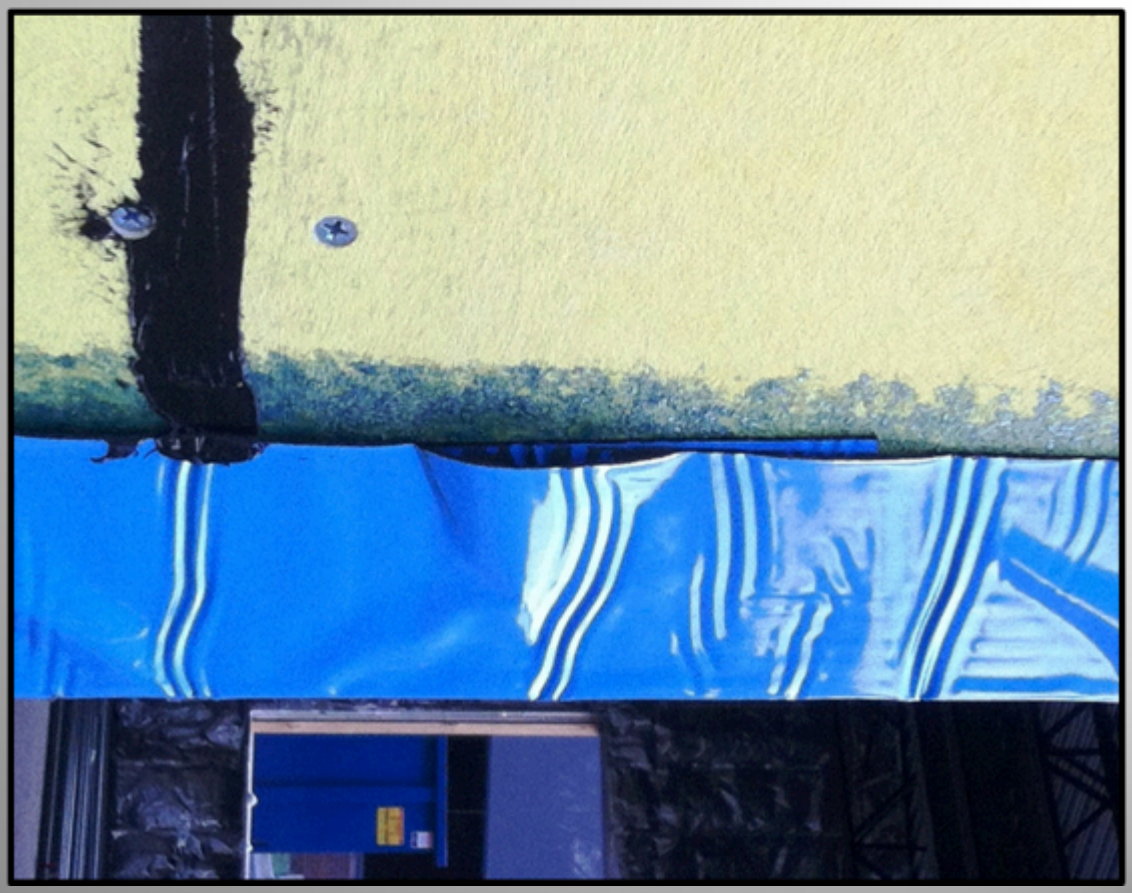

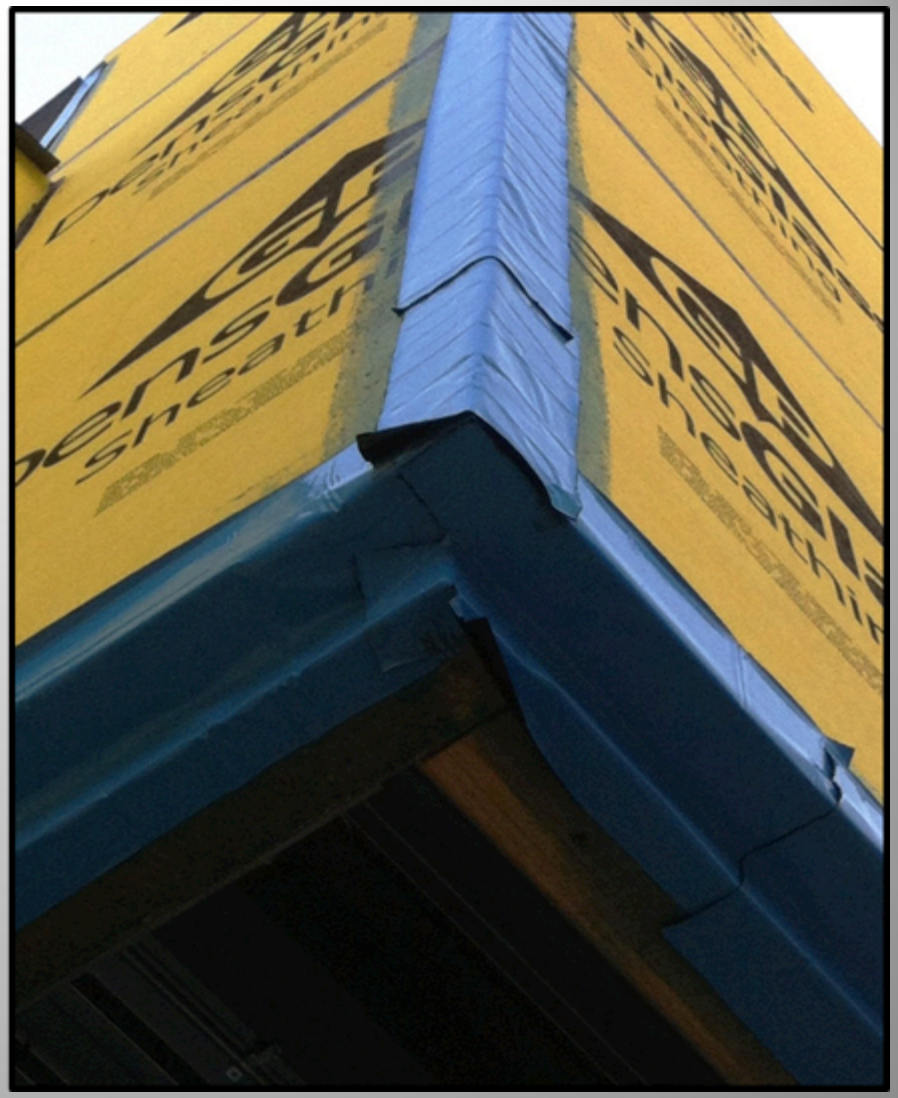


FORTIFLASH 40
MOISTOP next
FLASHING
06.14.2011 08:51

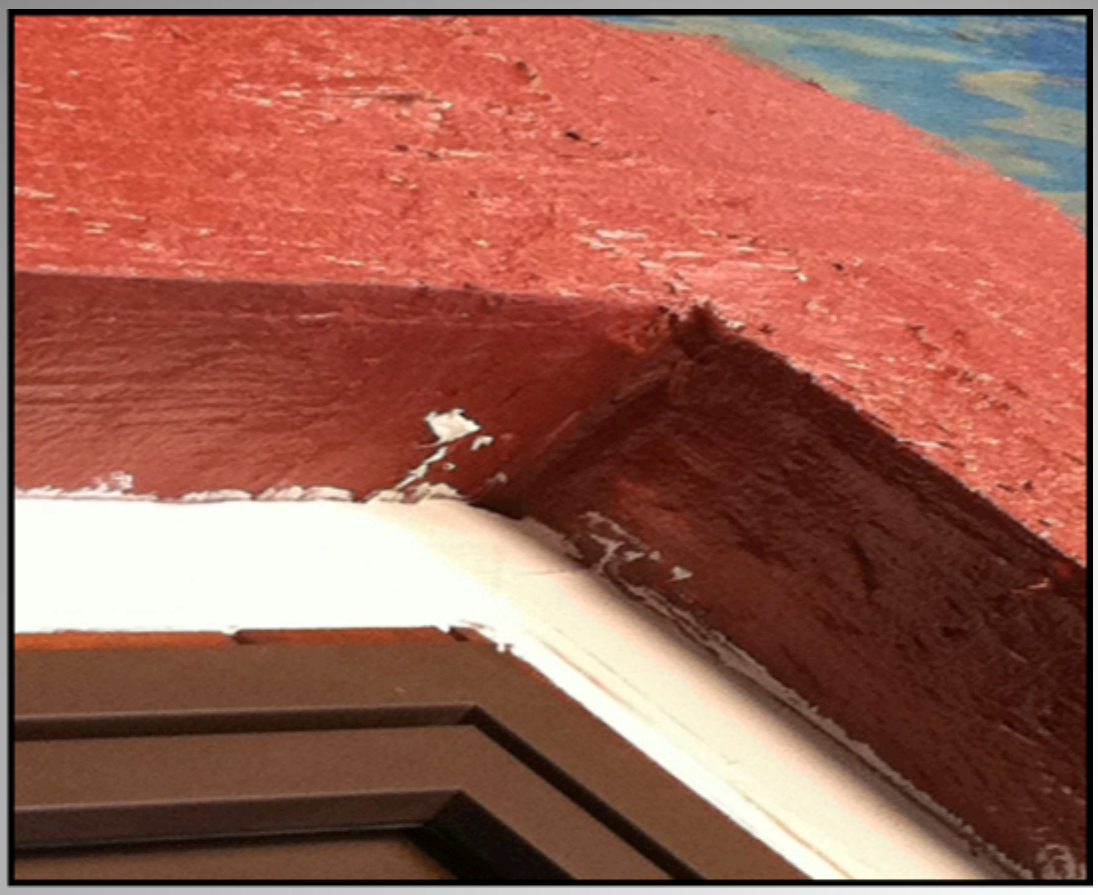


FORTIFLASH


SUPER
JUMBO TEX
60


Polyguard
PolyFlash


Polyguard
Polyguard
Polyguard
Polyguard
Polyguard
Polyguard
Polyguard
Polyguard


PolyFlash
PolyGuard

Silyl Terminated Poly Ether STPE

Liquid detailing membrane

Liquid detailing membrane

Property	STPE	Urethane	Silicone
Environmental friendliness	10	5	9
Non-bubbling	10	6	10
Low temperature gunnability	10	8	10
Slump resistance	10	10	10
Quick cure	10	7	10
Storage stability	10	7	9
Body (tooling)	8	10	8
Weather resistance	8	6	10
Adhesion to various substrates	10	5	8
Mechanical properties	10	10	10
Heat resistance, mechanical stability	9	8	10
Non-dirt pickup	10	10	5
Stain resistance	8	8	5
Paintability with water-based paint	10	10	3
Scale: 10 – excellent; 1 – very poor	**133**	**110**	**117**

Adhesives & Sealants Council

"In addition to their high performance properties, these sealants are achieving popularity due to their formulation versatility that allows the customization of viscosity and early strength development for various applications. "

ASTM E 2178 1.57 lbs/sqft = 75 Pascals = 25mph

ASTM E 2357 1.57 lbs/sqft = 75 Pascals = 25mph

ASTM E 2178 1.57 lbs/sqft = **75** Pascals = **25**mph

ASTM E 2357 1.57 lbs/sqft = **75** Pascals = **25**mph

✓ **2,880** Pascals

✓ **155mph** wind-driven rain

✓ Category 5 Hurricane

Air Changes per Hour @ 50 Pascals = 20mph wind

Energy Star	**4.0** ACH (Zone 6)
IECC	**3.0** ACH
Passive House	**0.6** ACH
Sheetwrap/Peel&Stick	**7.01** ACH
Fluid applied	**0.17** ACH

Liquid Applied at 2,880 Pascals = 155mph wind Category V hurricane

0.53 ACH

Testing to Failure

2,880 Pascals
155mph wind-driven rain
Category 5 Hurricane

- Sometimes the walls break.
- This is a good thing.
- If the membrane fails before the wall does, you have an intact building that leaks.

Liquid detailing membrane

Common specification

“For installation procedures and requirements not addressed in manufacturer's written instructions, comply with installation requirements in **ASTM E 2112.**”

Designation: E 2112 – 07

Standard Practice for
Installation of Exterior Windows, Doors and Skylights[1]

"Instructions for complete integration of external wall components."

1 **Install sheet membrane into and below window opening.**

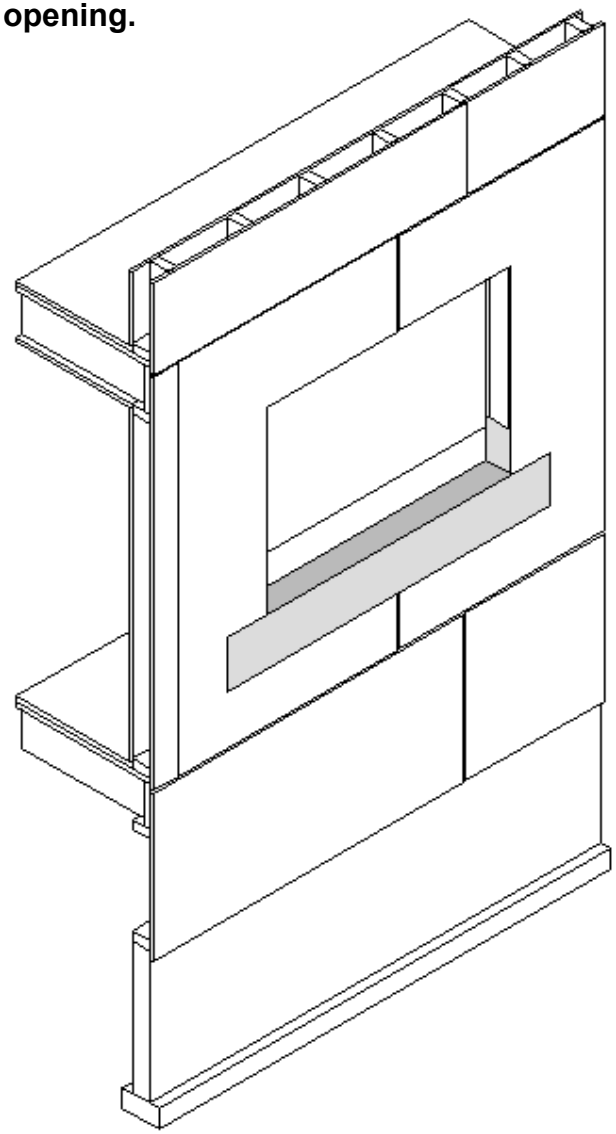

2 **Install sheet metal tray.**

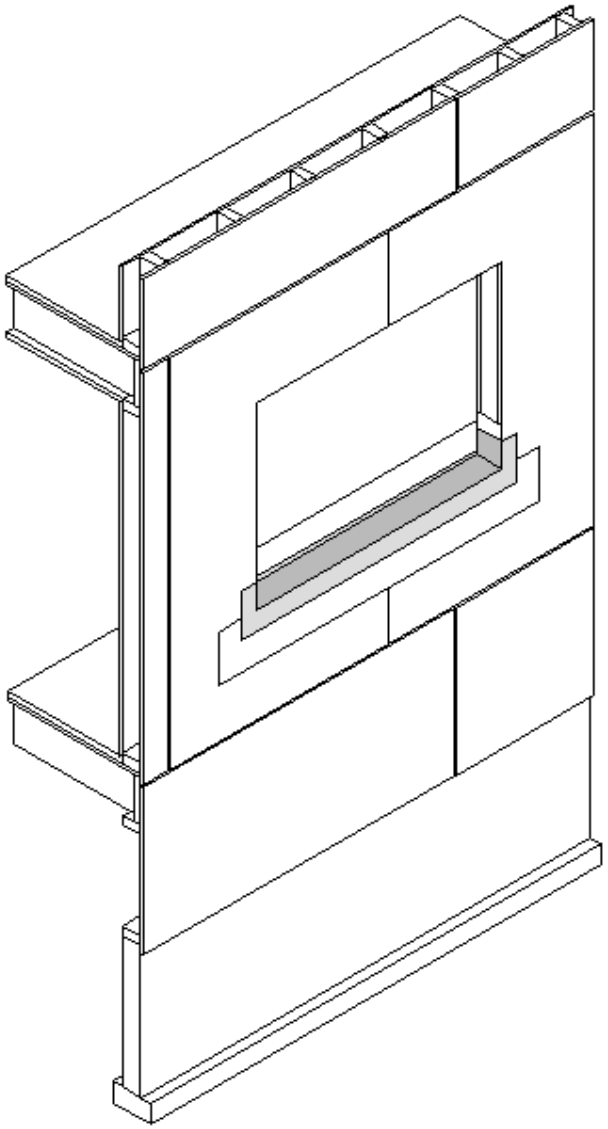

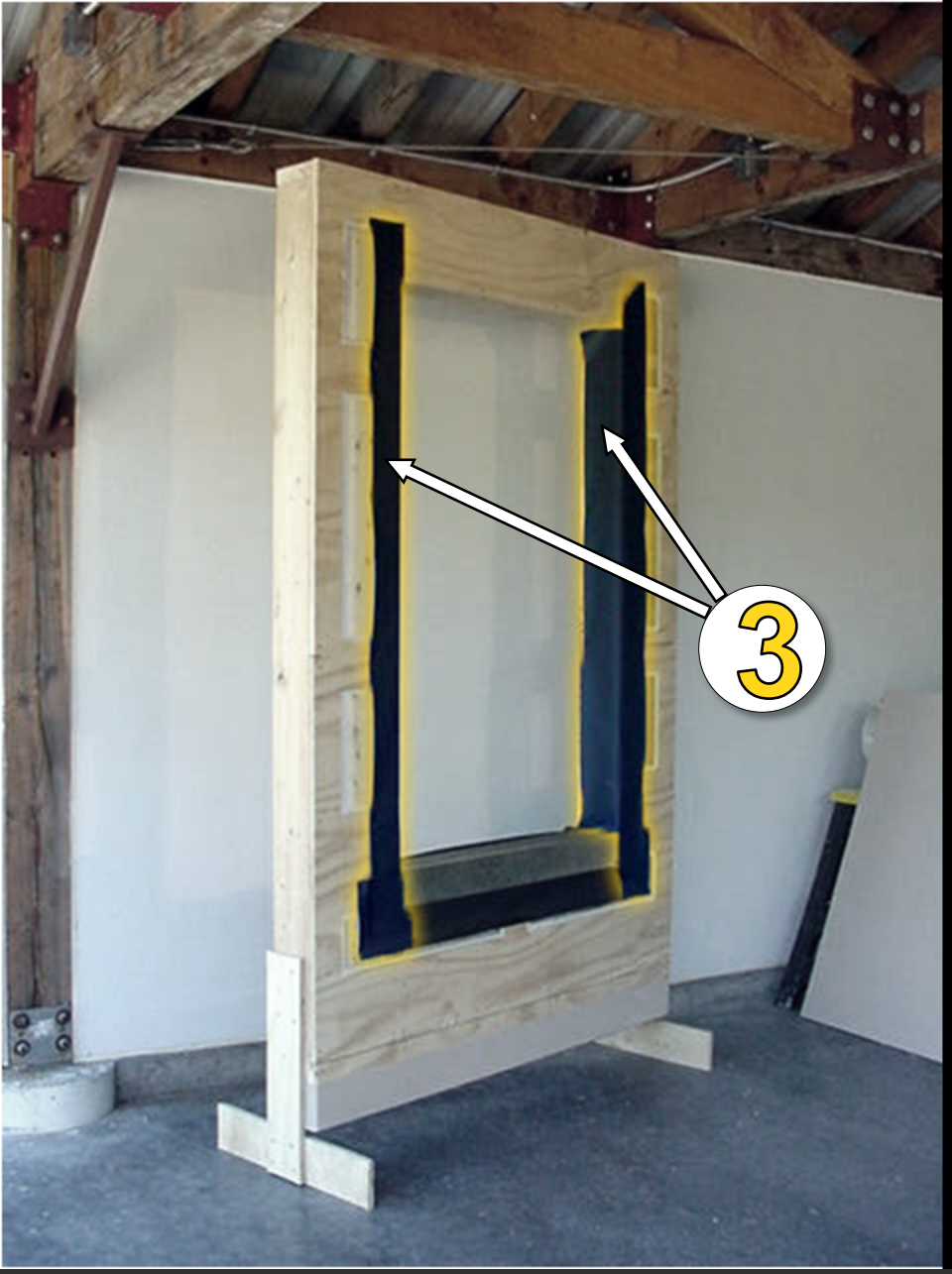

3 **Install sheet membrane into window opening.**

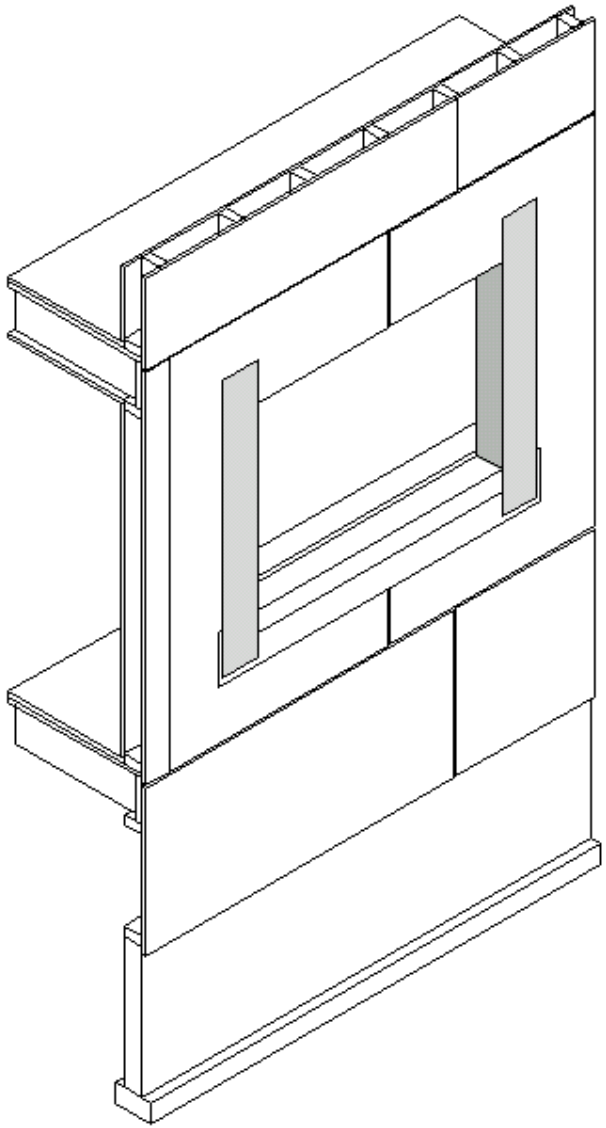

4 **Install shims.**

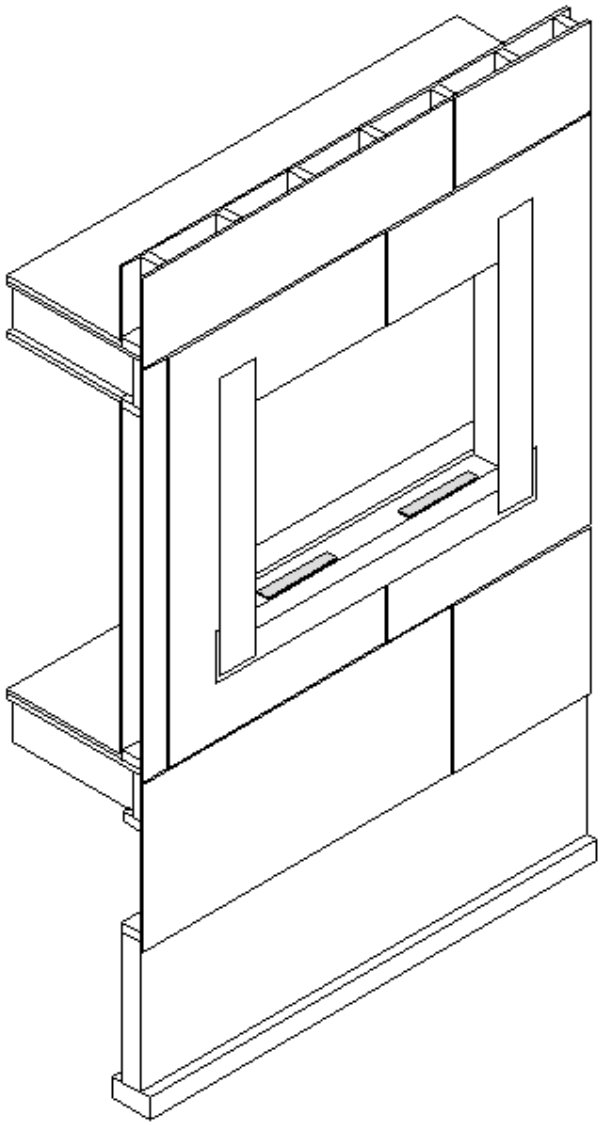

5 **Install window.**

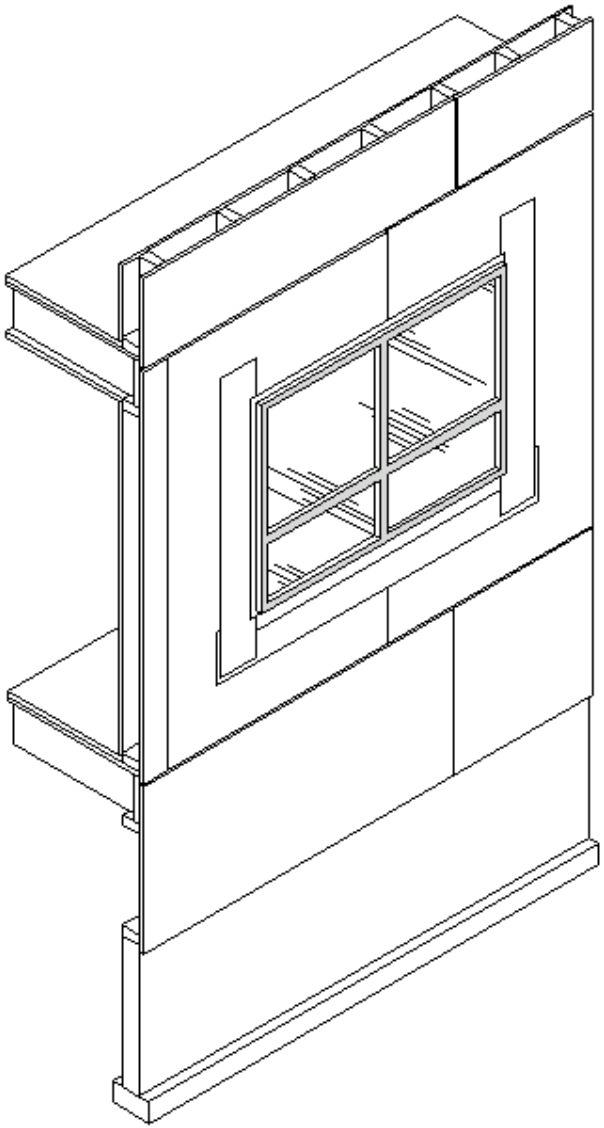

6 **Install sheet metal head flashing.**

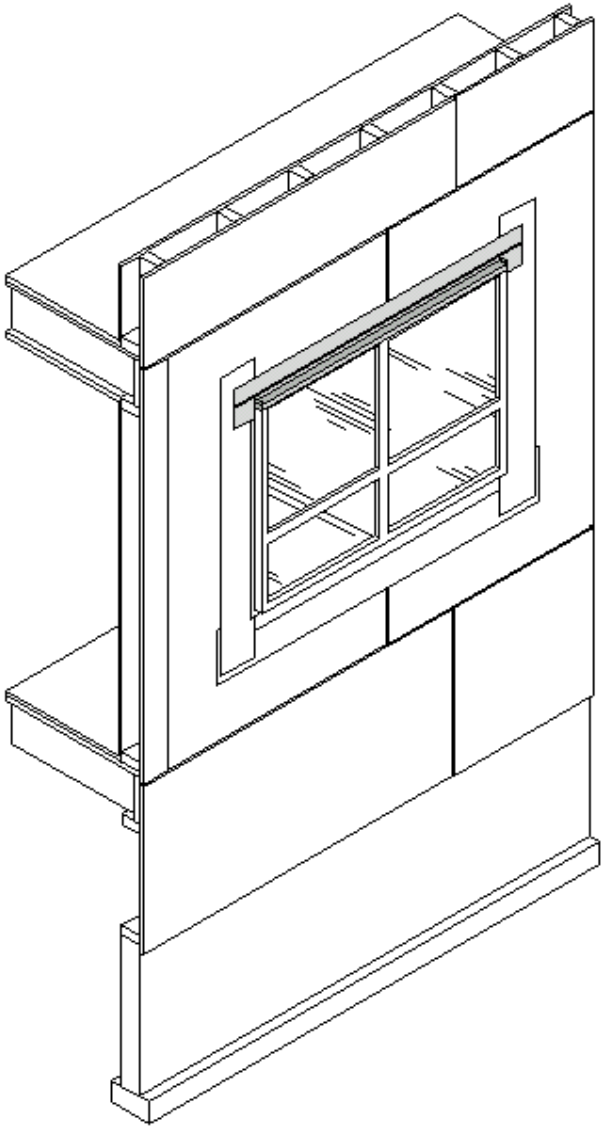

7

Install Peel-n-Stick above from substrate to head flashing.

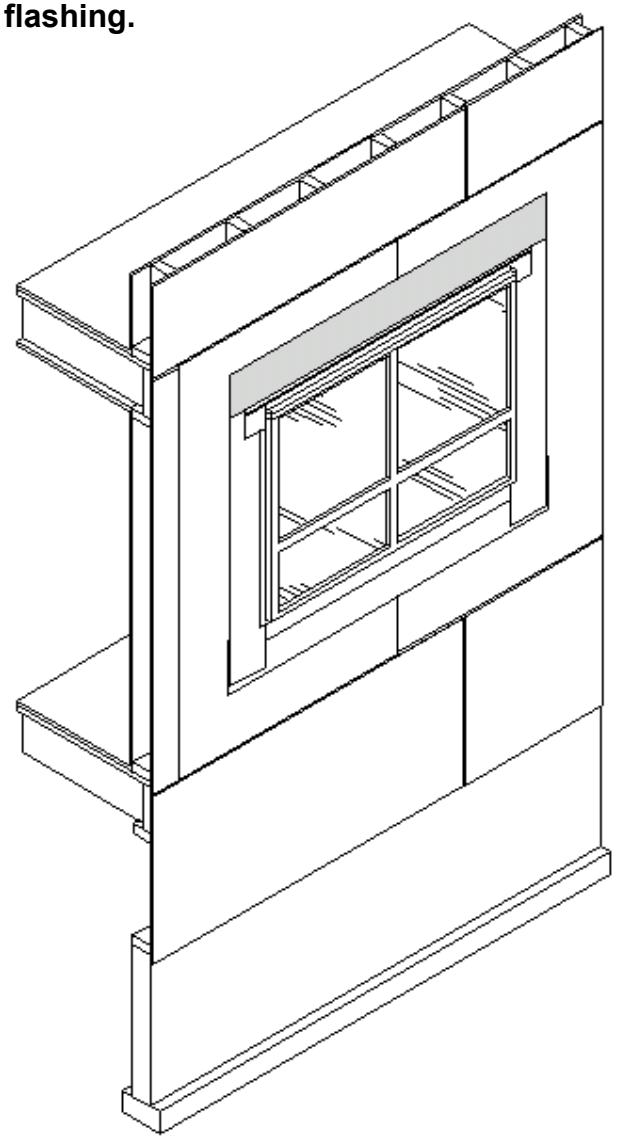

8 **Begin building installation paper with drip edge flashing.**

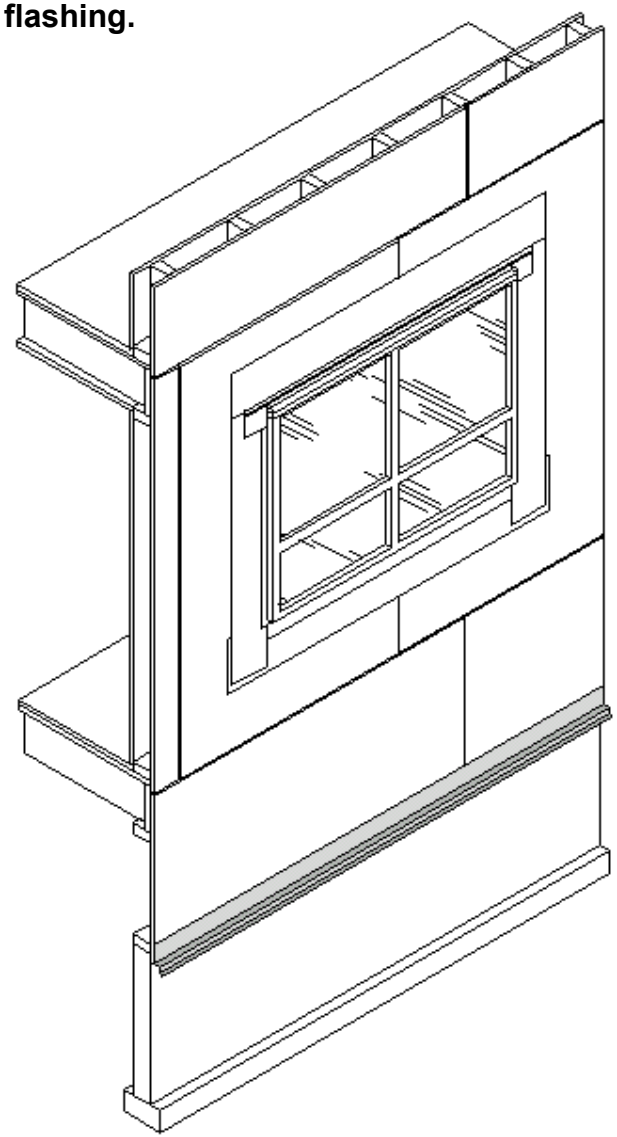

9 **Building paper installation first layer first row.**

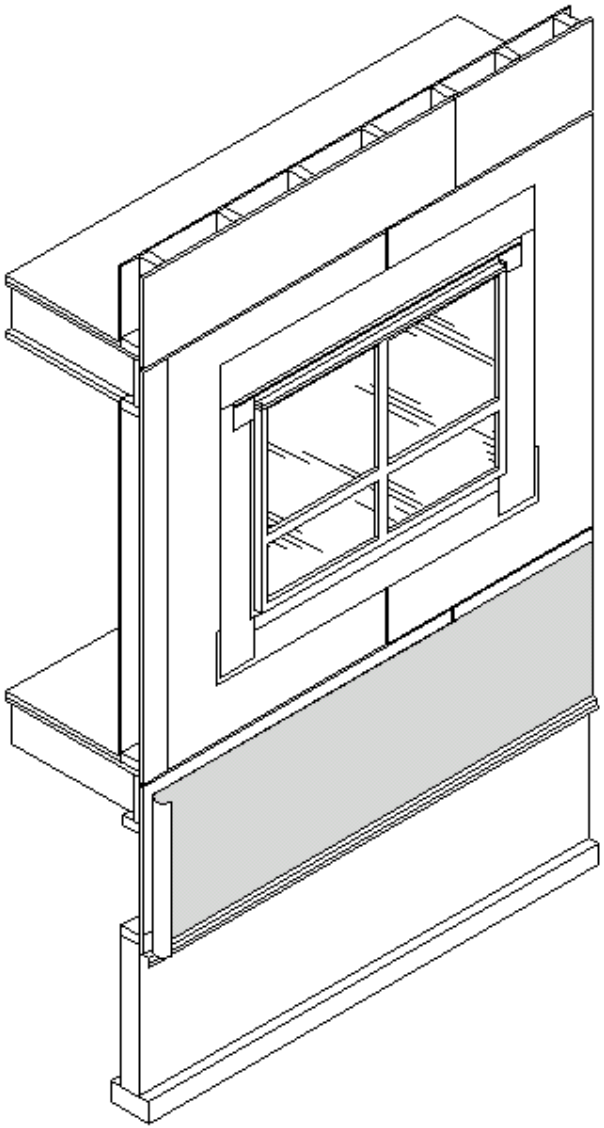

10 Building paper installation first layer second row.

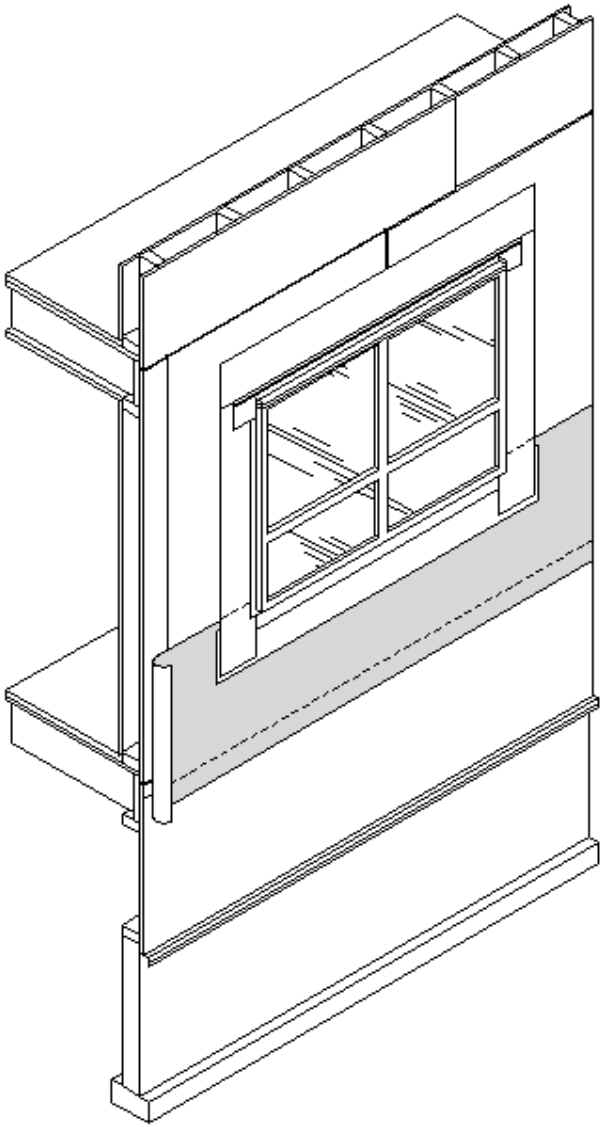

11 **Building paper installation first layer third row.**

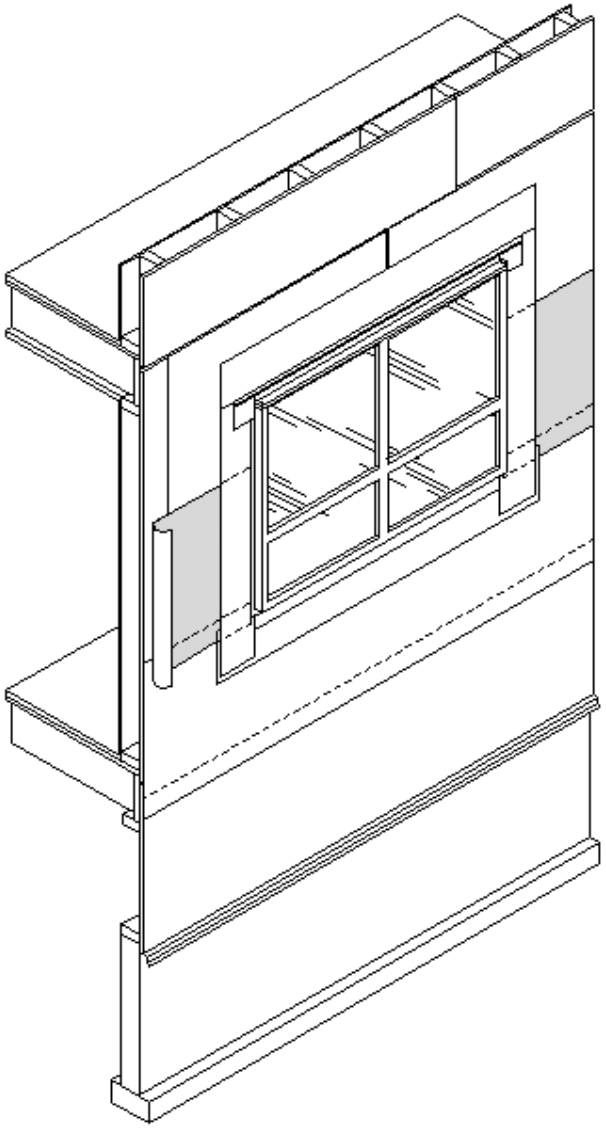

12 **Building paper installation first layer fourth row.**

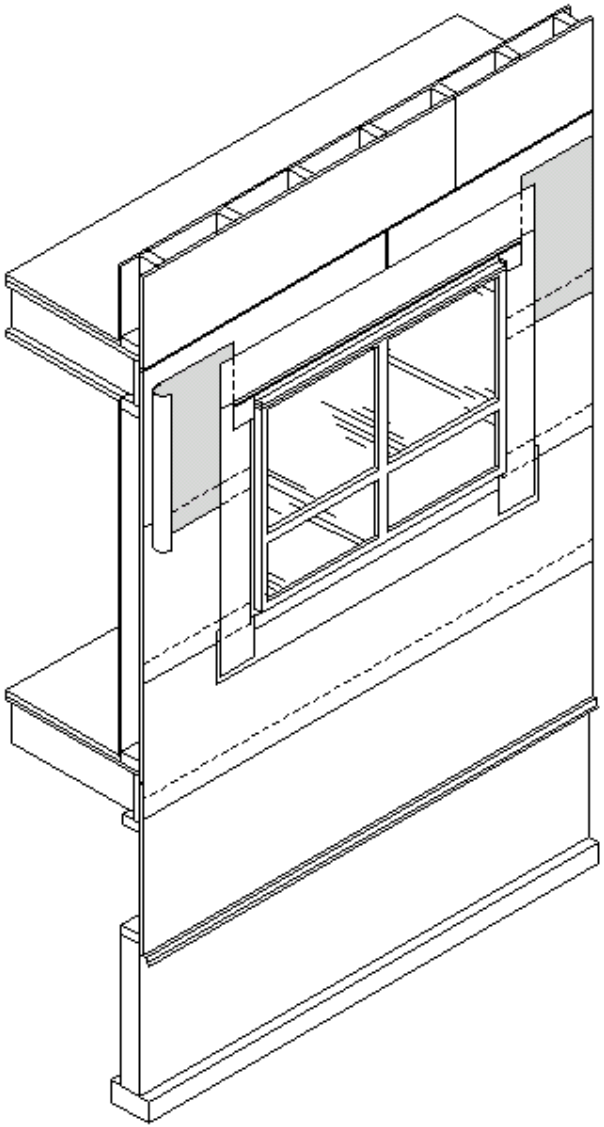

13 **Building paper installation first layer fifth row.**

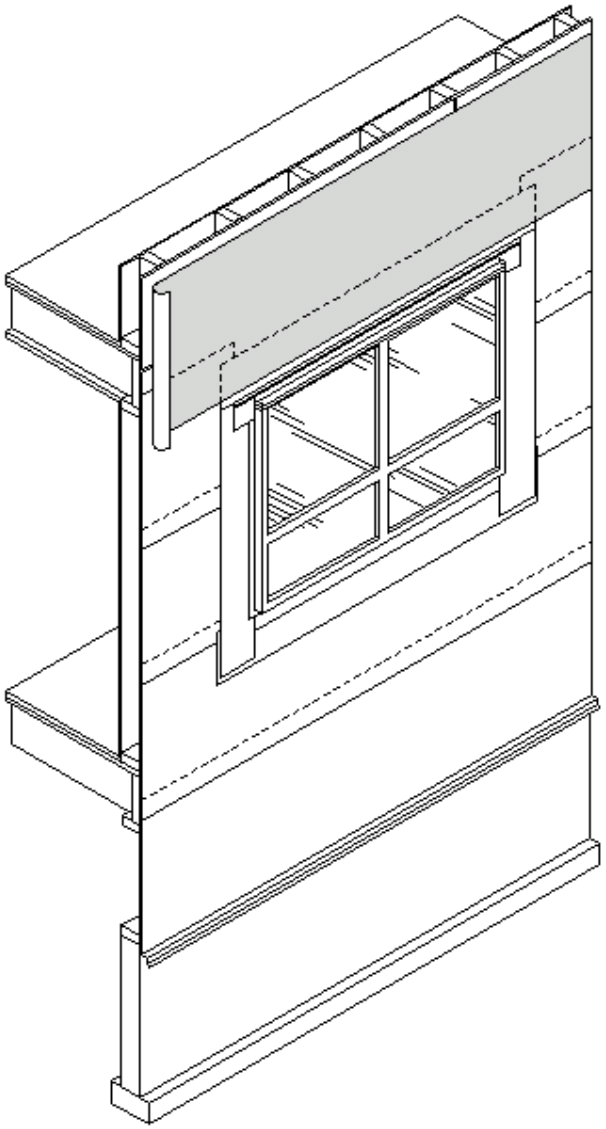

14 **Building paper installation second layer first row (stager laps).**

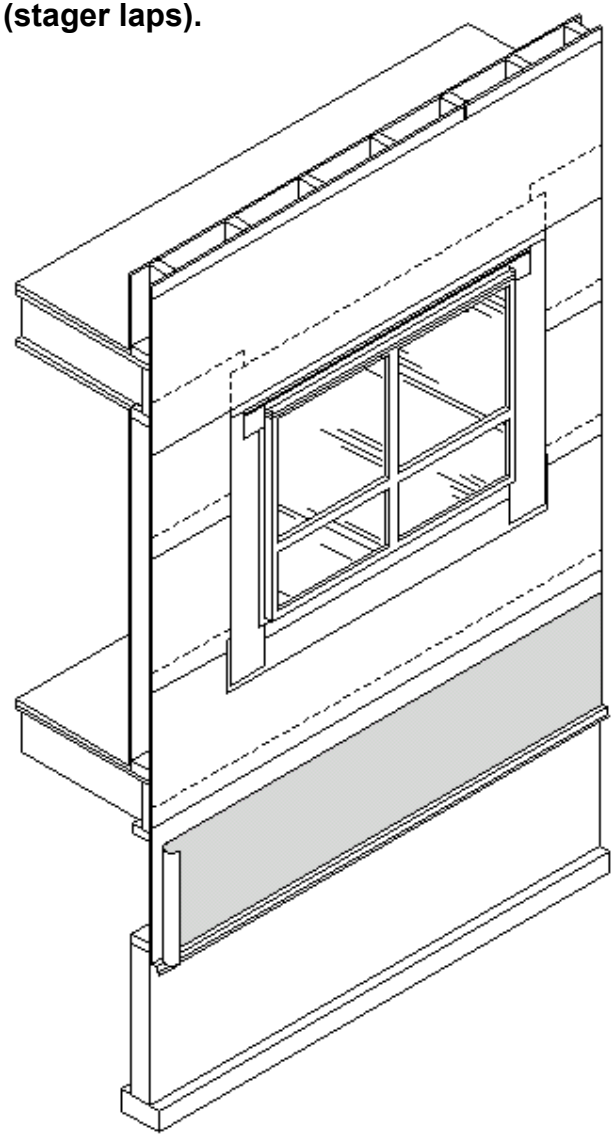

15 **Building paper installation second layer second row (stager laps).**

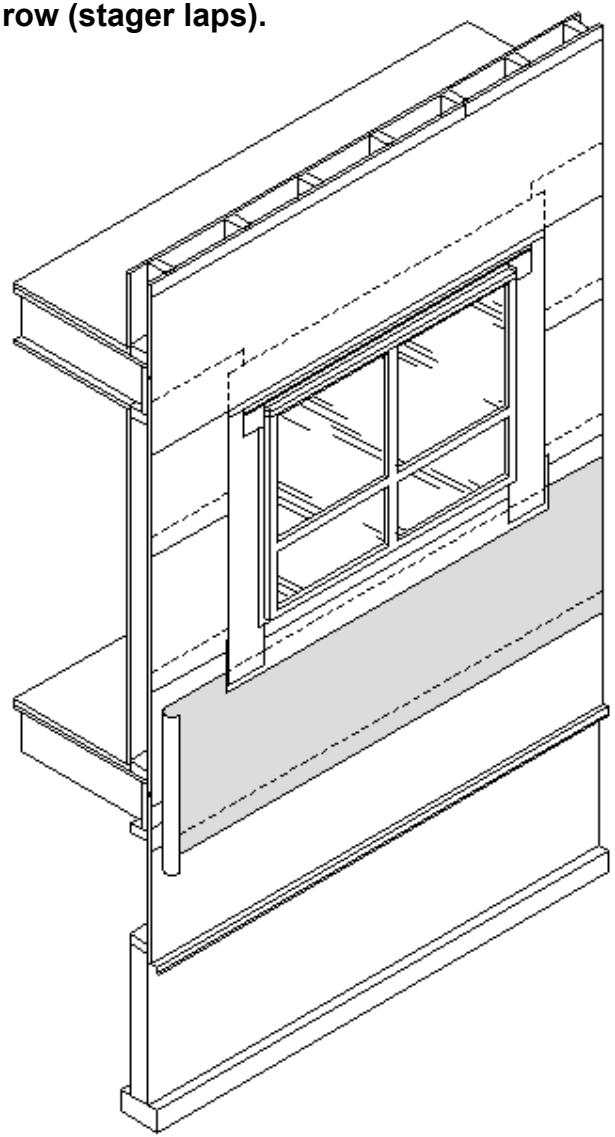

16 **Building paper installation second layer third row (stager laps).**

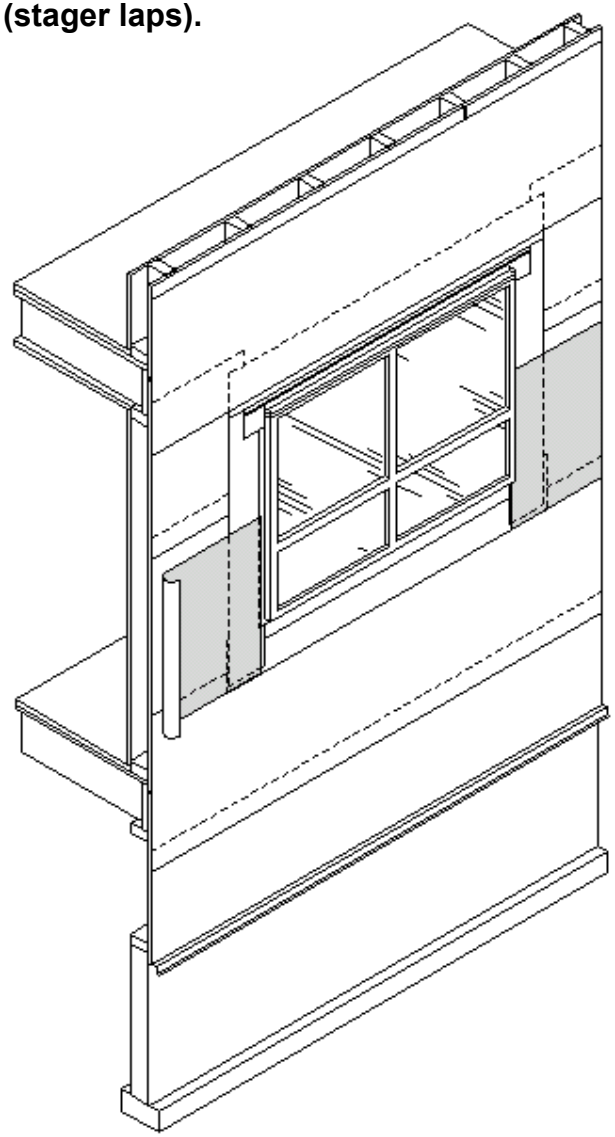

17 **Building paper installation second layer fourth row (stager laps).**

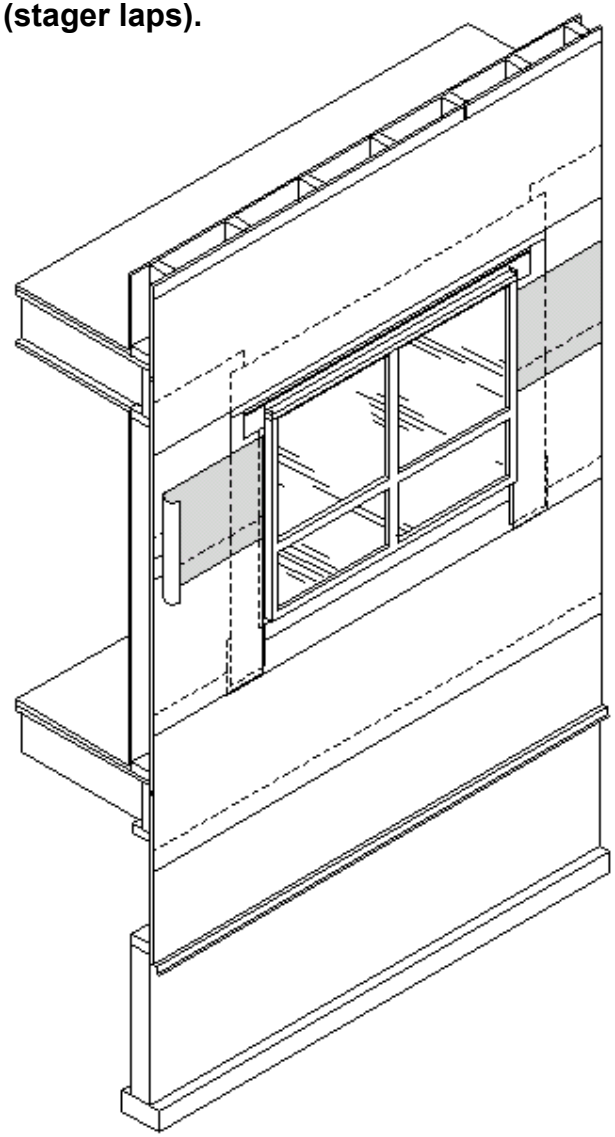

18 Building paper installation second layer fifth row

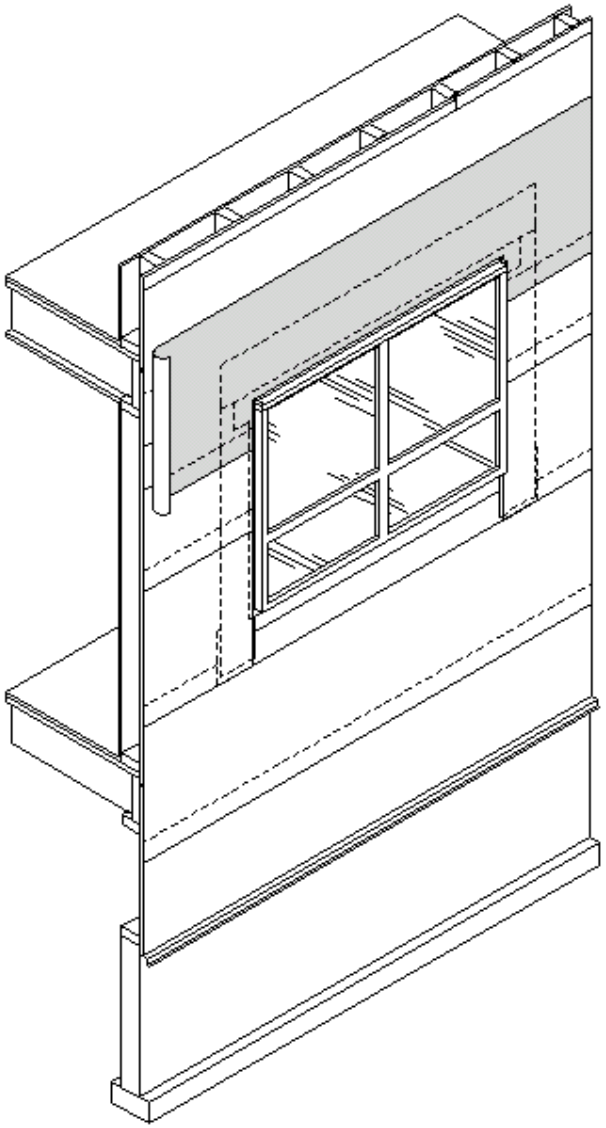

19 **Building paper installation second layer sixth row (stager laps).**

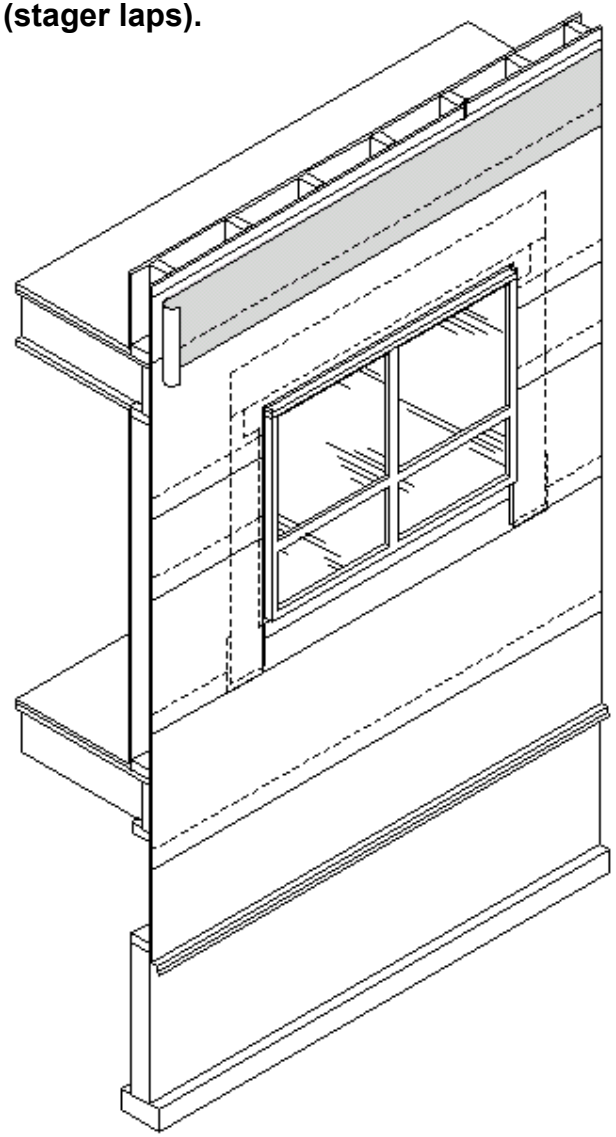

20 **Lift second layer fifth row at window to prepare for peel-n-stick.**

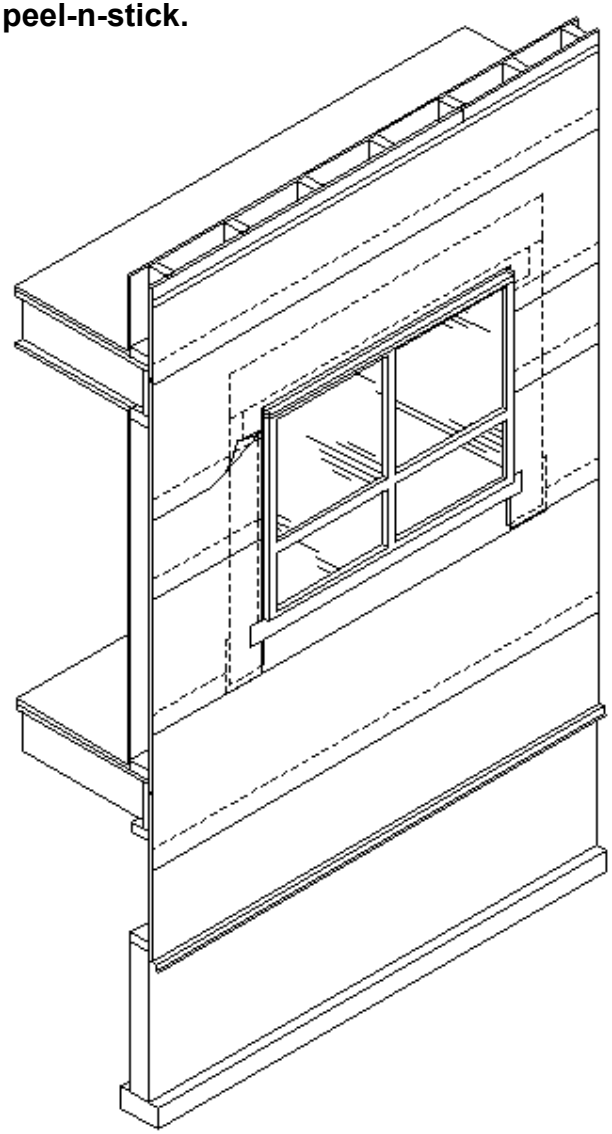

21 **Install peel-n-stick as shown.**

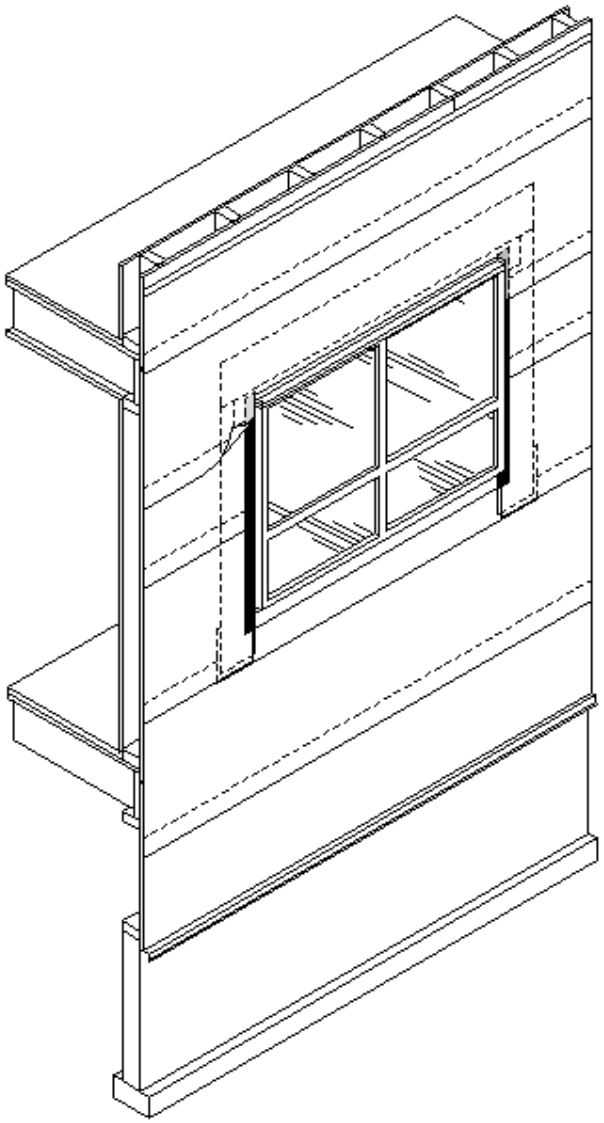

ASTM E-2112 Window Flashing & Installation

Tested per AAMA 502-90 @

- 55 mph wind – driven rain

Window masked out to eliminate leakage through window assembly

Time

0:00

Pressure

1.44 In. W/C
7.55 psf

Wind Speed

54.5 mph

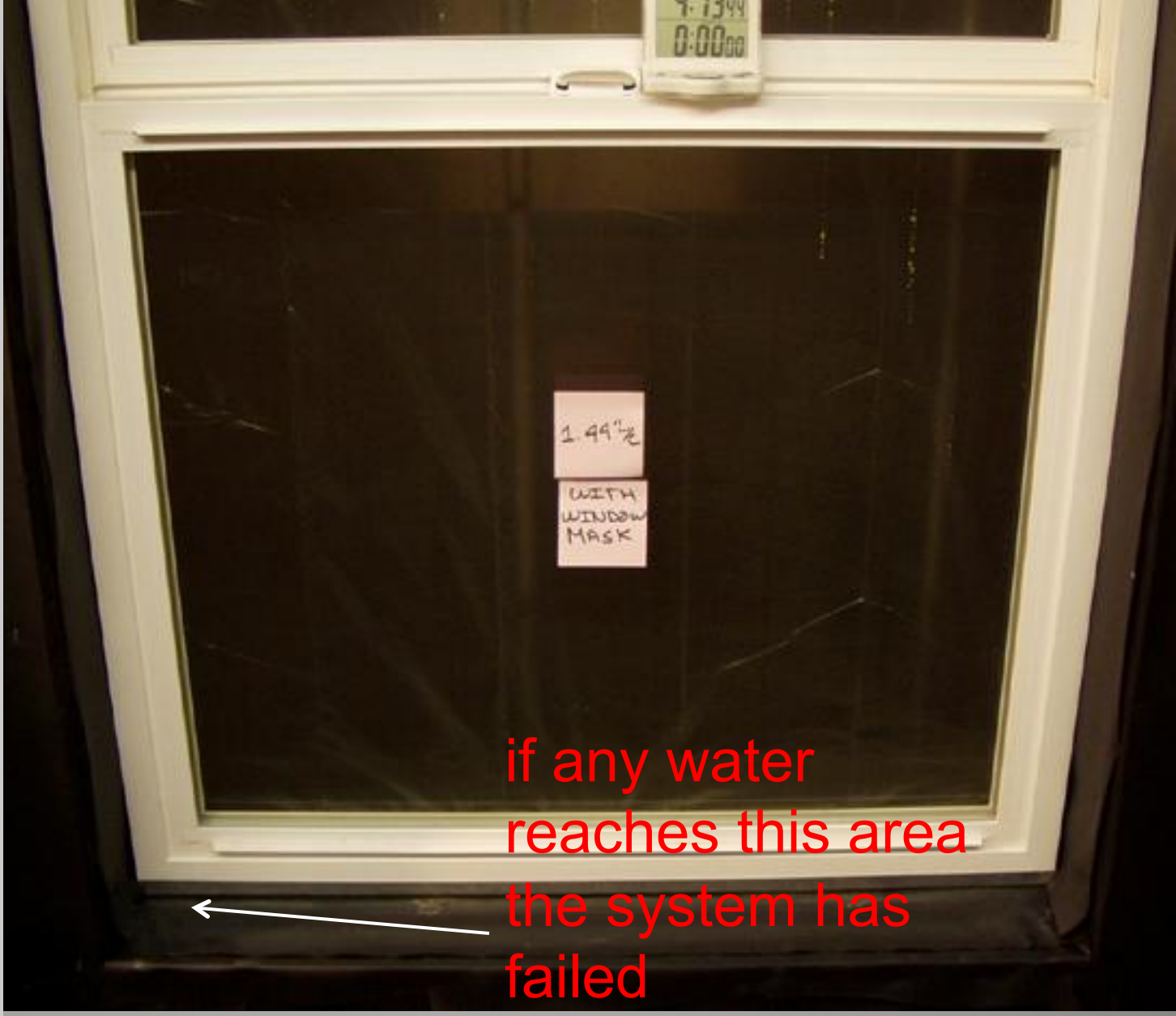

START
air + water

Time

0:37

Pressure

1.44 In. W/C
7.55 psf

Wind Speed

54.5 mph

Failure at window/ through- wall interface

Time

0:57

Pressure

1.44 In. W/C
7.55 psf

Wind Speed

54.5 mph

Failure at window/ through- wall interface

Time

2:17

Pressure

1.44 In. W/C
7.55 psf

Wind Speed

54.5 mph

Failure at window/ through- wall interface

Time

3:02

Pressure

1.44 In. W/C
7.55 psf

Wind Speed

54.5 mph

Failure at window/ through- wall interface

Time

5:07

Pressure

1.44 In. W/C
7.55 psf

Wind Speed

54.5 mph

21 **Install peel-n-stick as shown.**

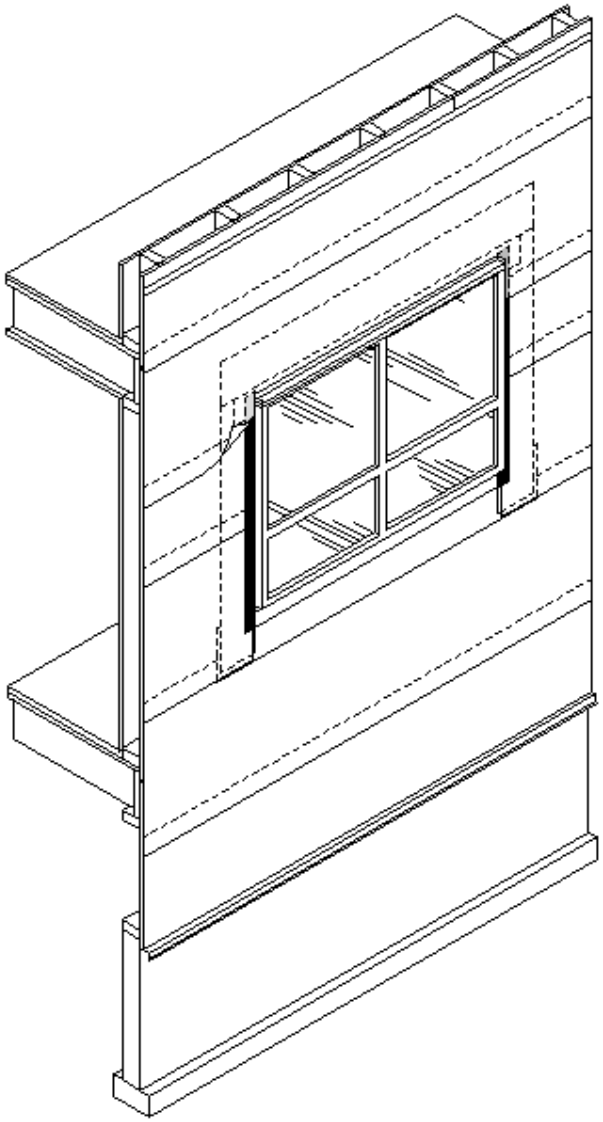

21 **Install peel-n-stick as shown.**

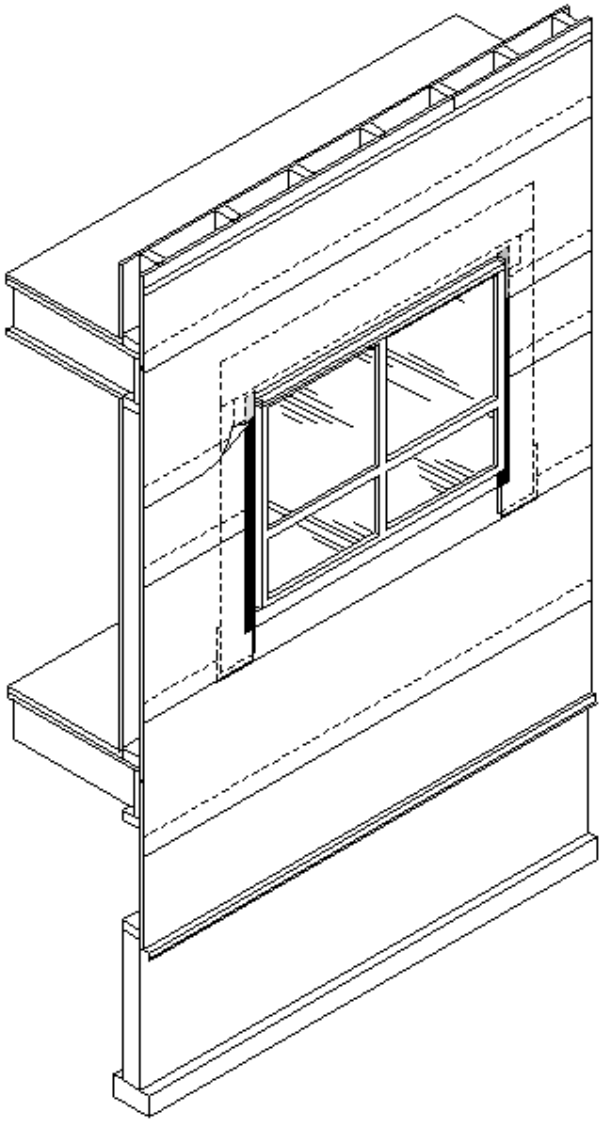

21 **Install peel-n-stick as shown.**

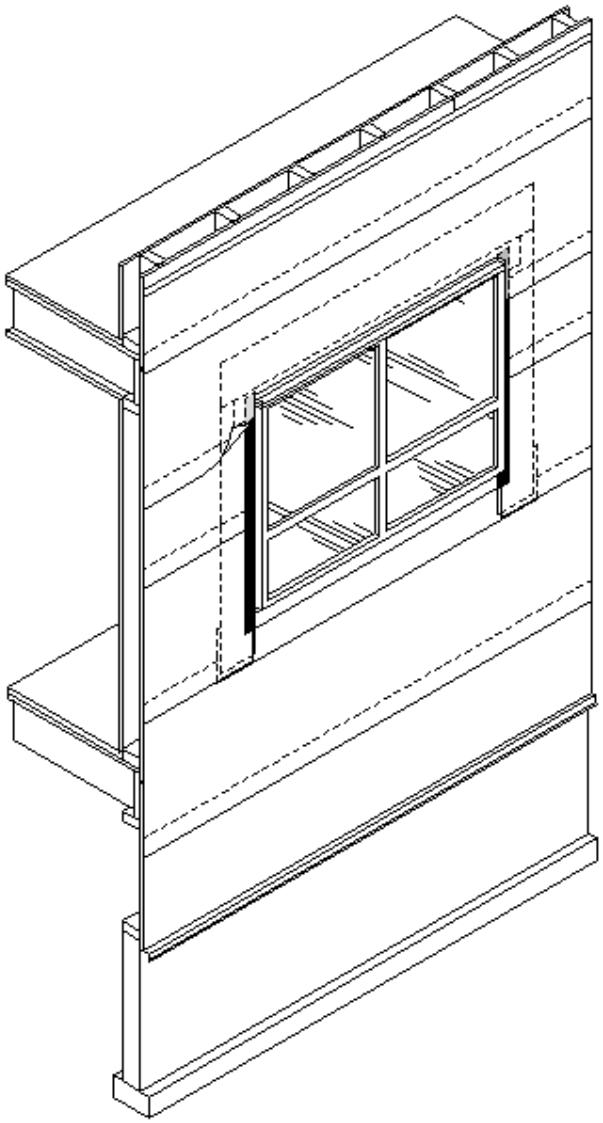

21 **Install peel-n-stick as shown.**

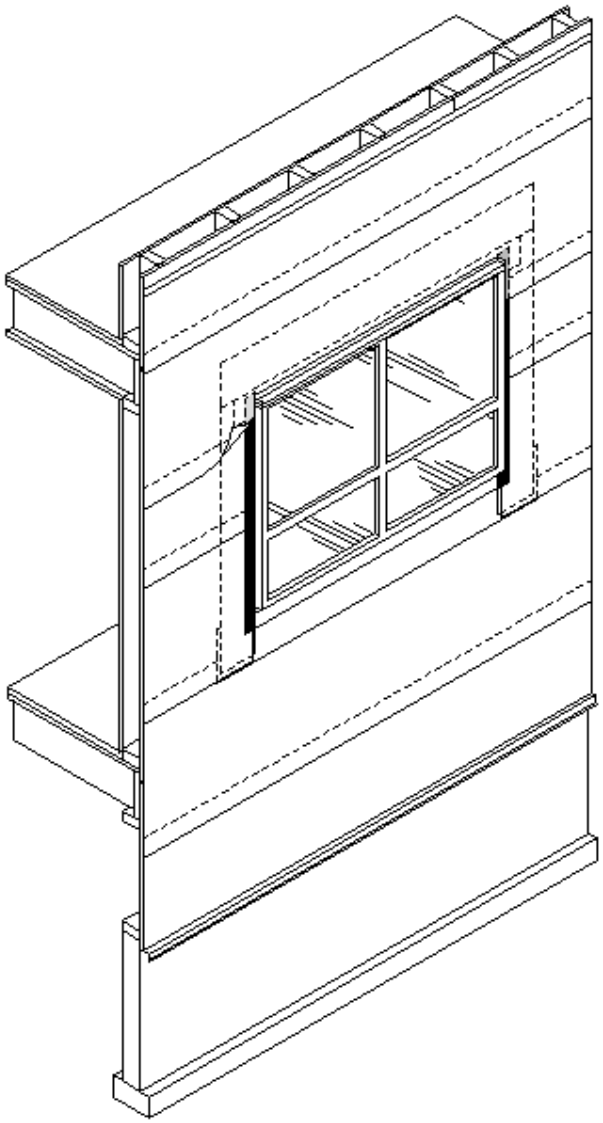

21 **Install peel-n-stick as shown.**

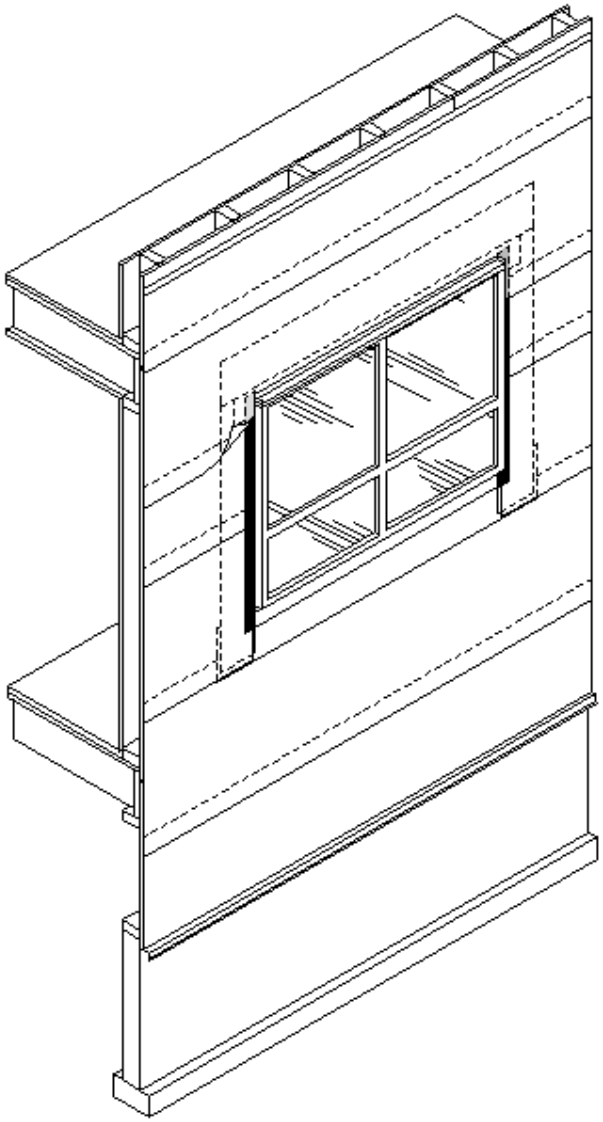

21 **Install peel-n-stick as shown.**

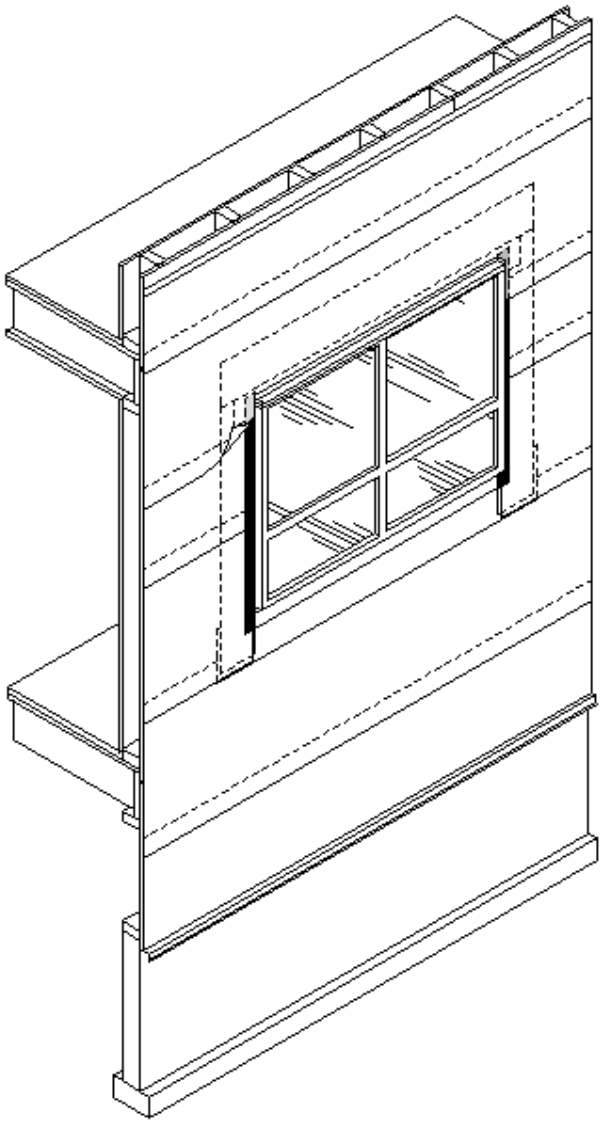

21 **Install peel-n-stick as shown.**

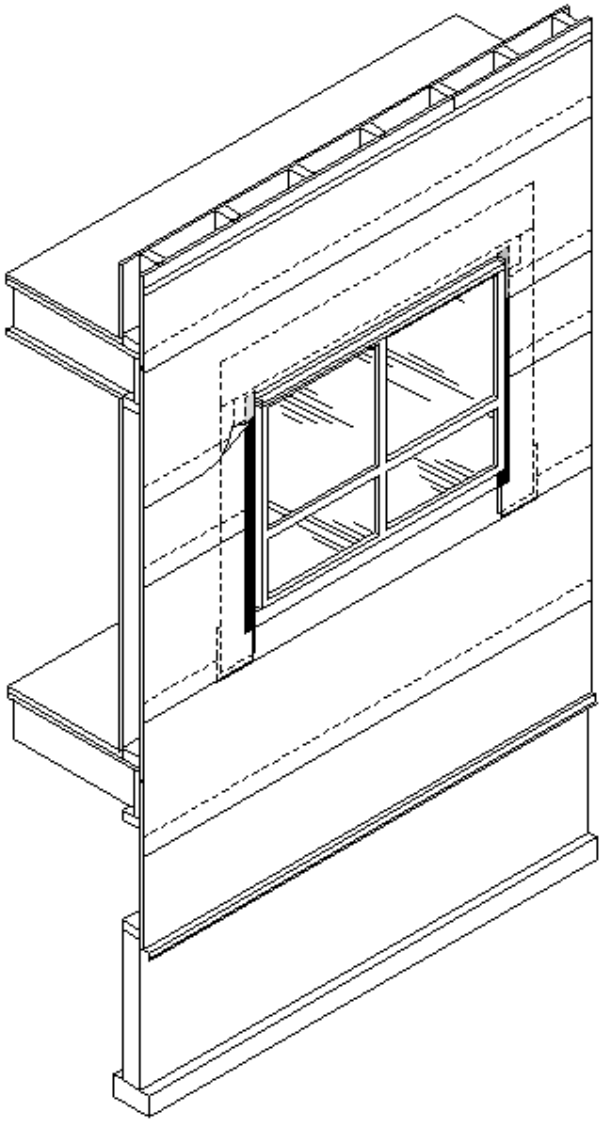

20 **Lift second layer fifth row at window to prepare for peel-n-stick.**

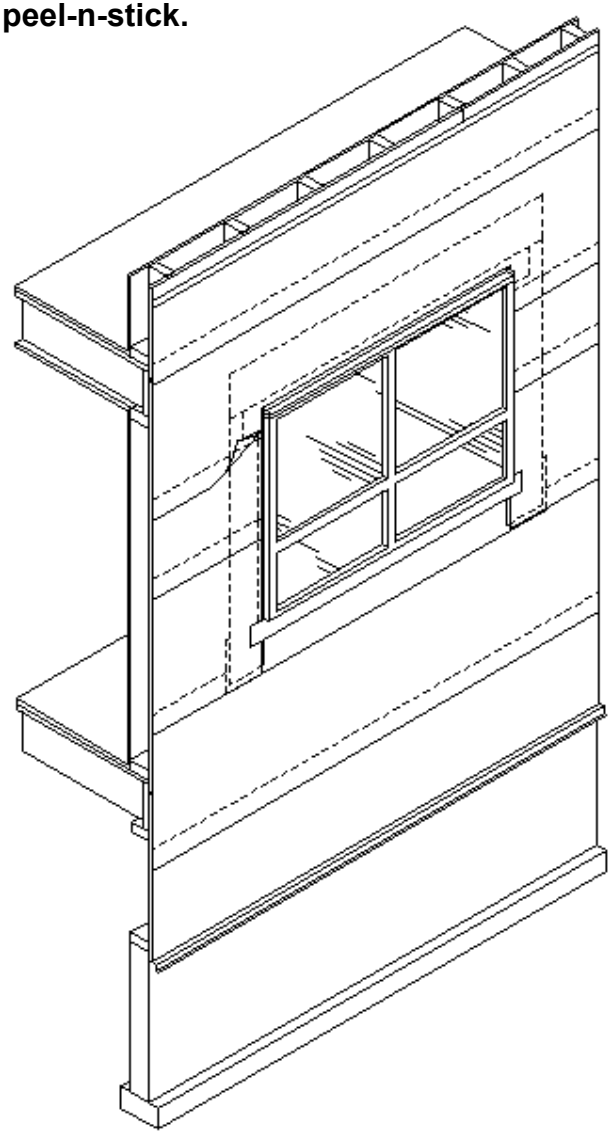

19

Building paper installation second layer sixth row (stager laps).

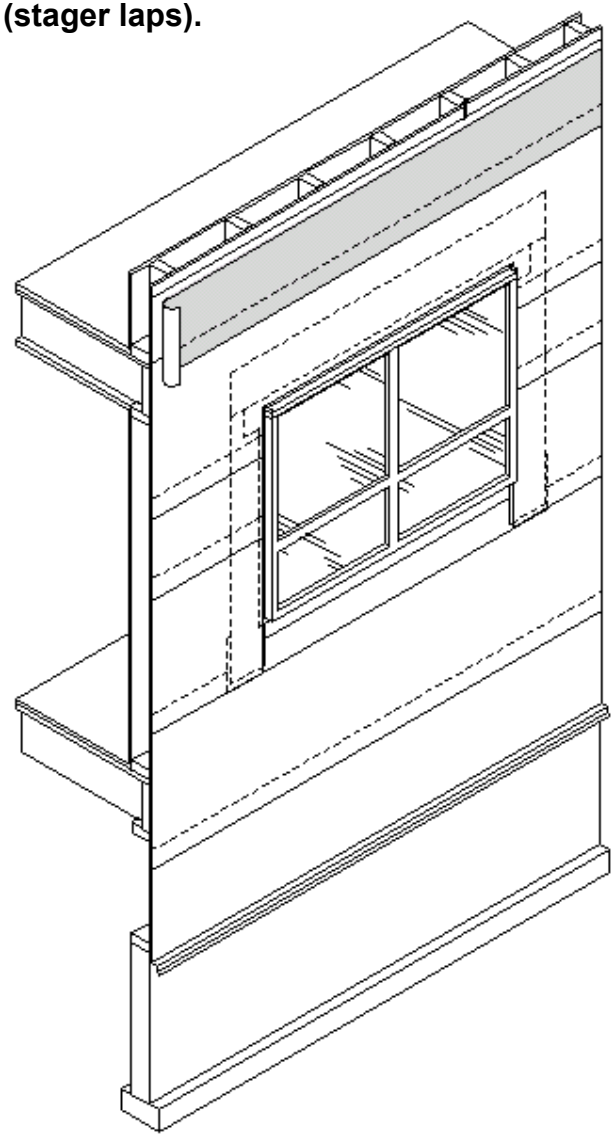

19 **Building paper installation second layer sixth row (stager laps).**

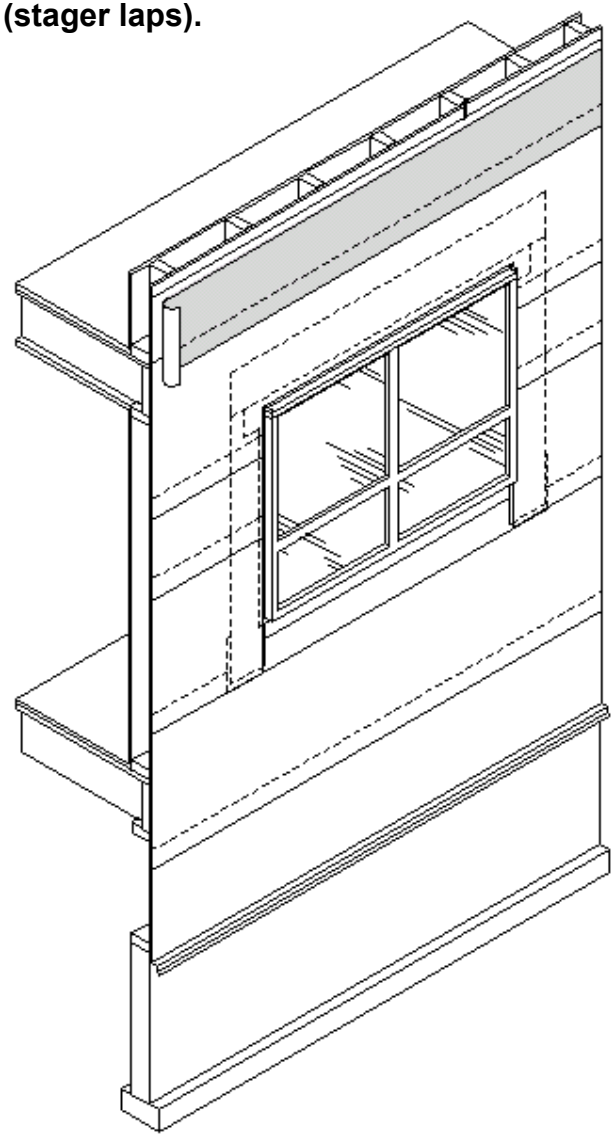

19

Building paper installation second layer sixth row (stager laps).

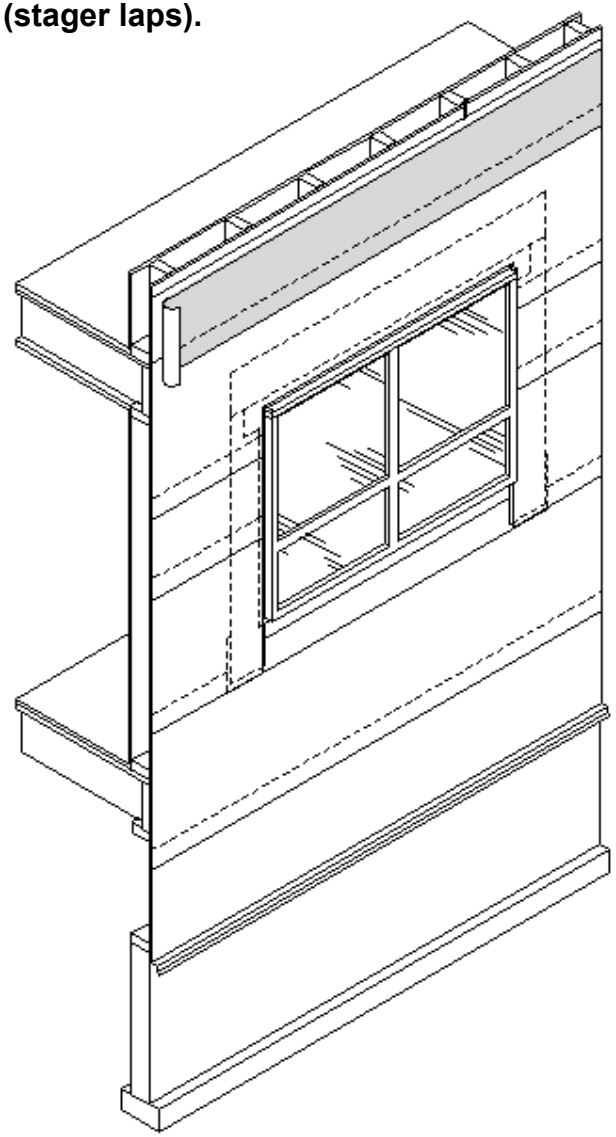

18 Building paper installation second layer fifth row

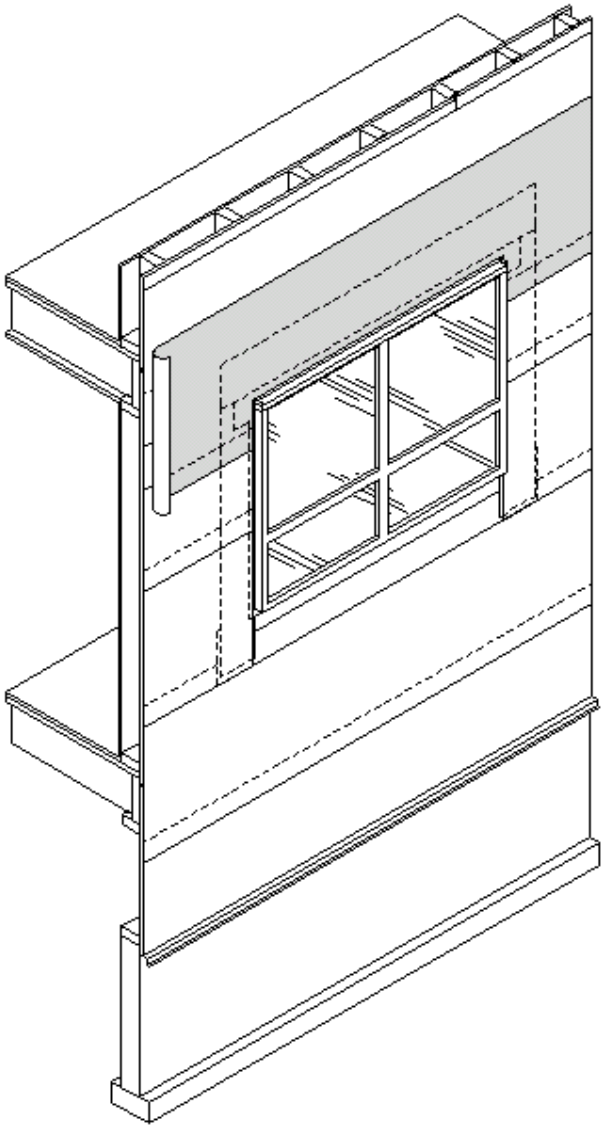

18 Building paper installation second layer fifth row

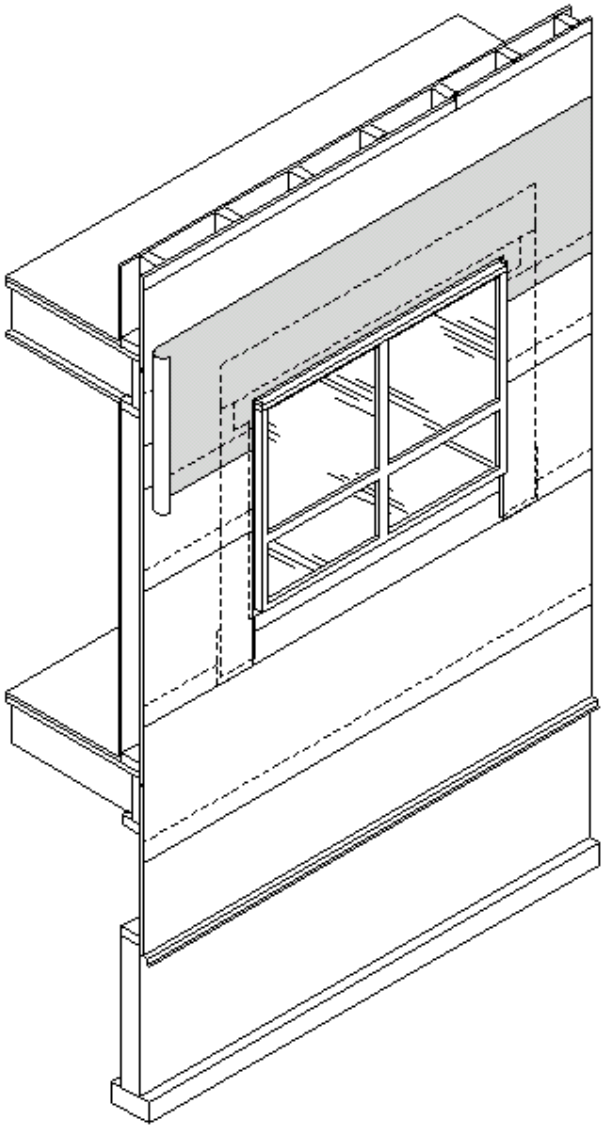

18 Building paper installation second layer fifth row

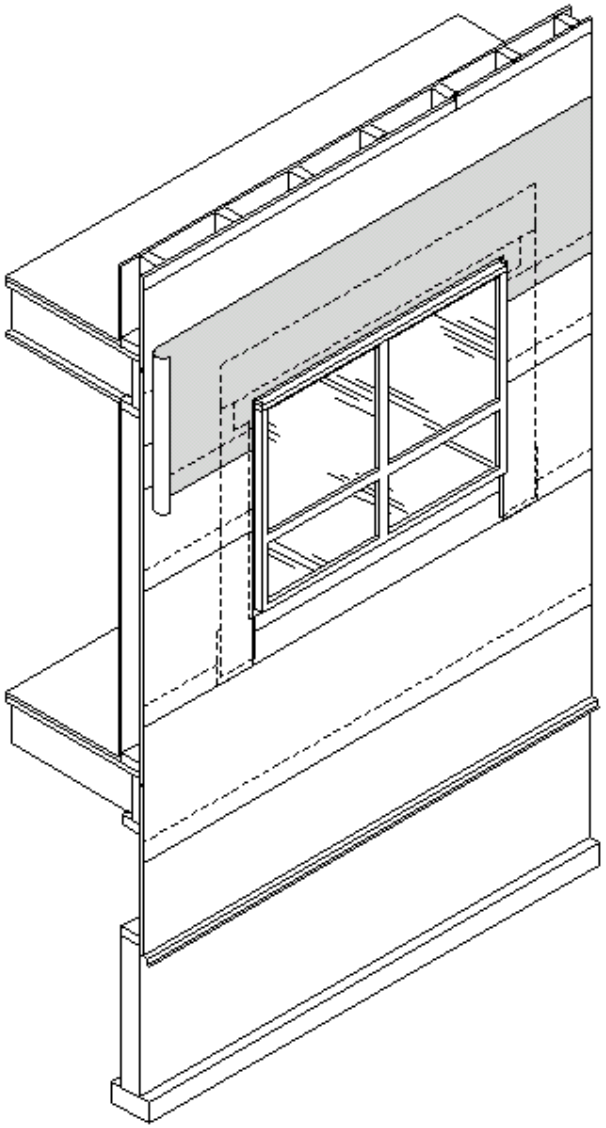

18 Building paper installation second layer fifth row

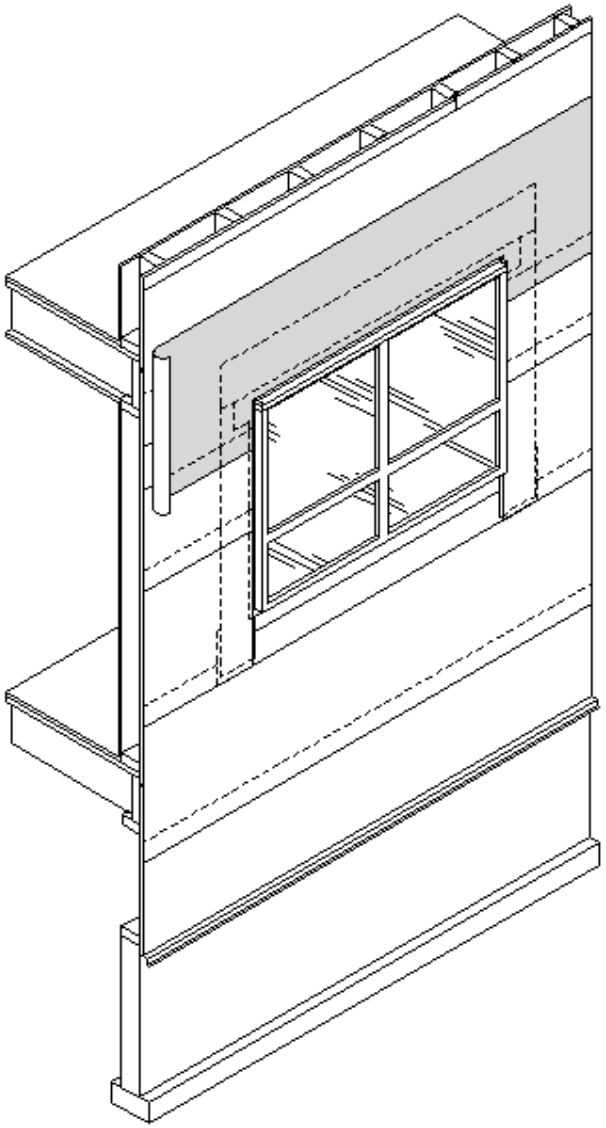

18 Building paper installation second layer fifth row

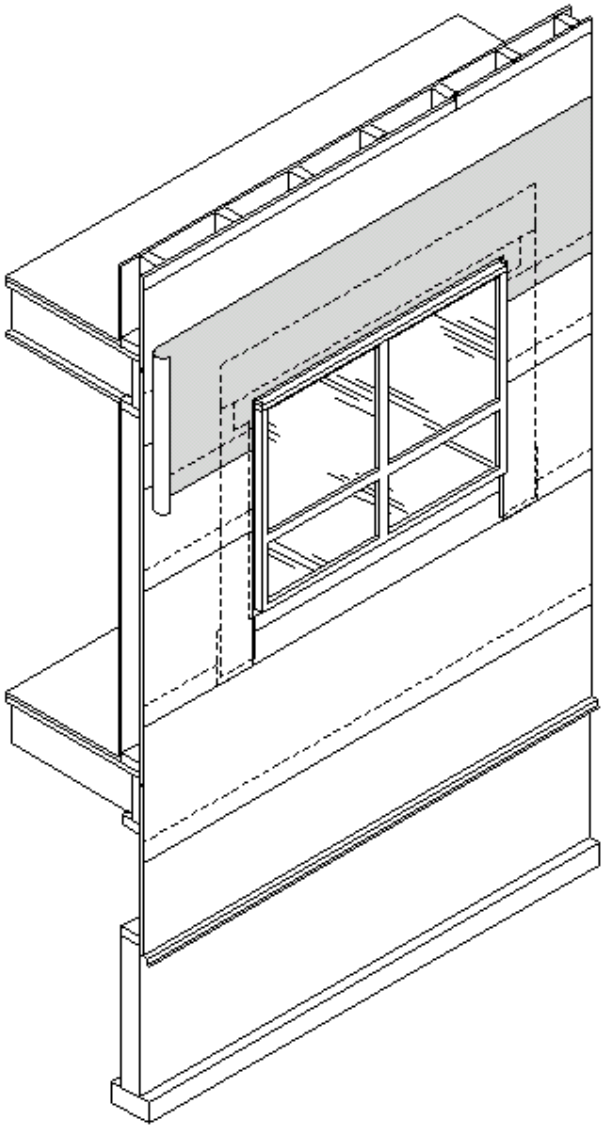

18 Building paper installation second layer fifth row

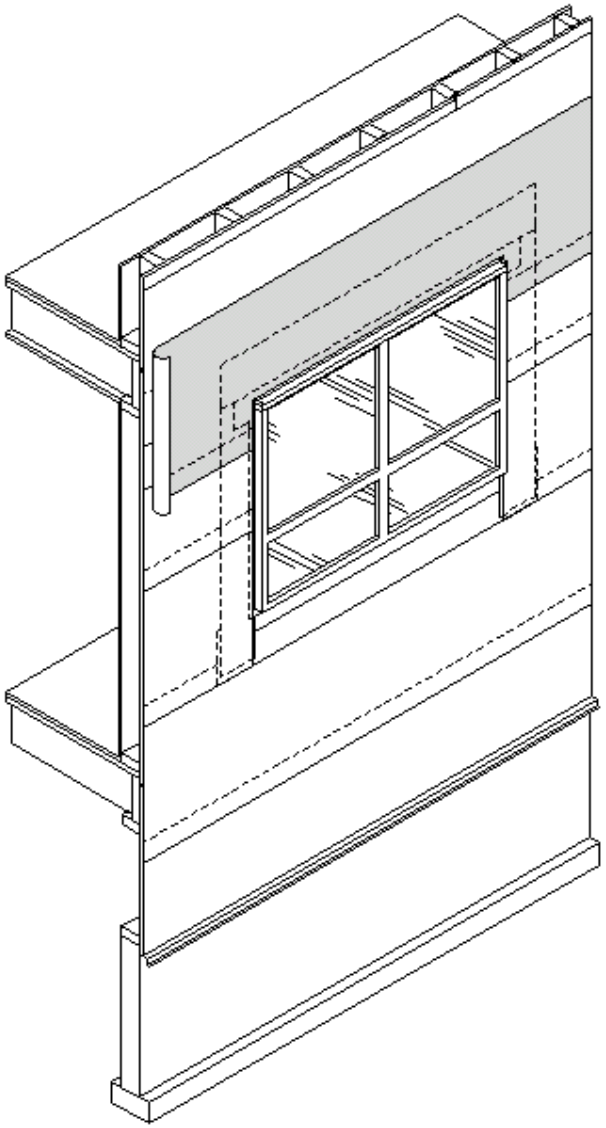

18 Building paper installation second layer fifth row

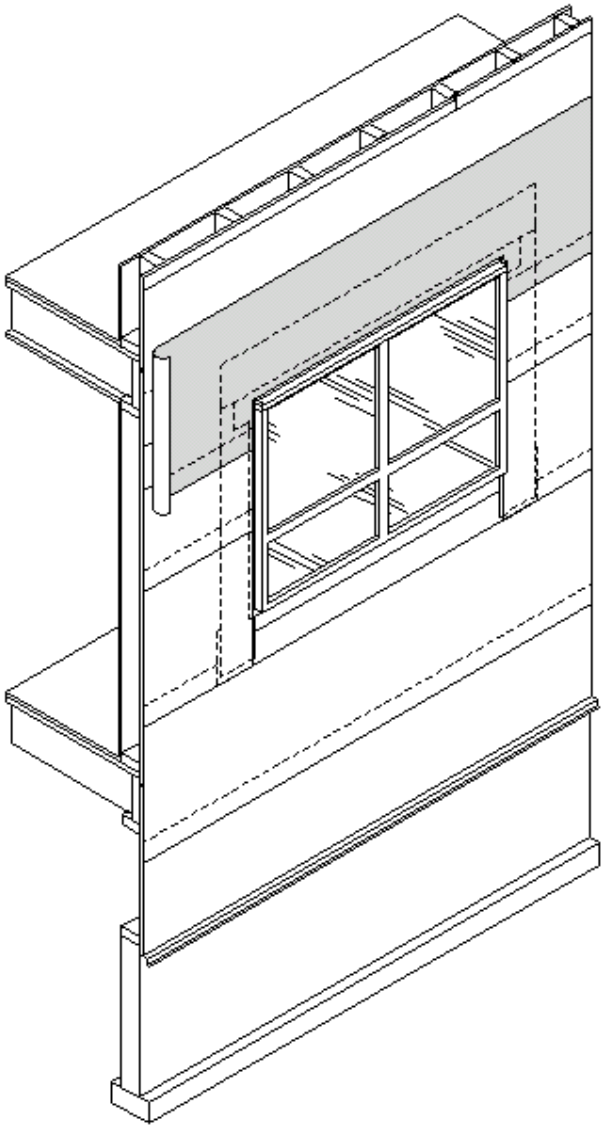

17

Building paper installation second layer fourth row (stager laps).

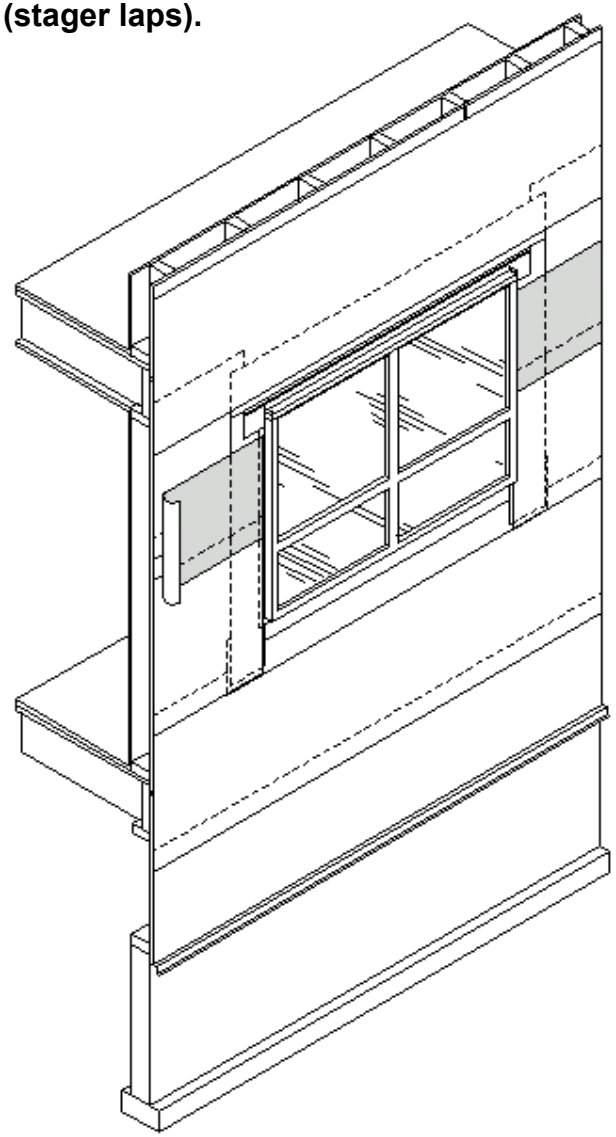

17 **Building paper installation second layer fourth row (stager laps).**

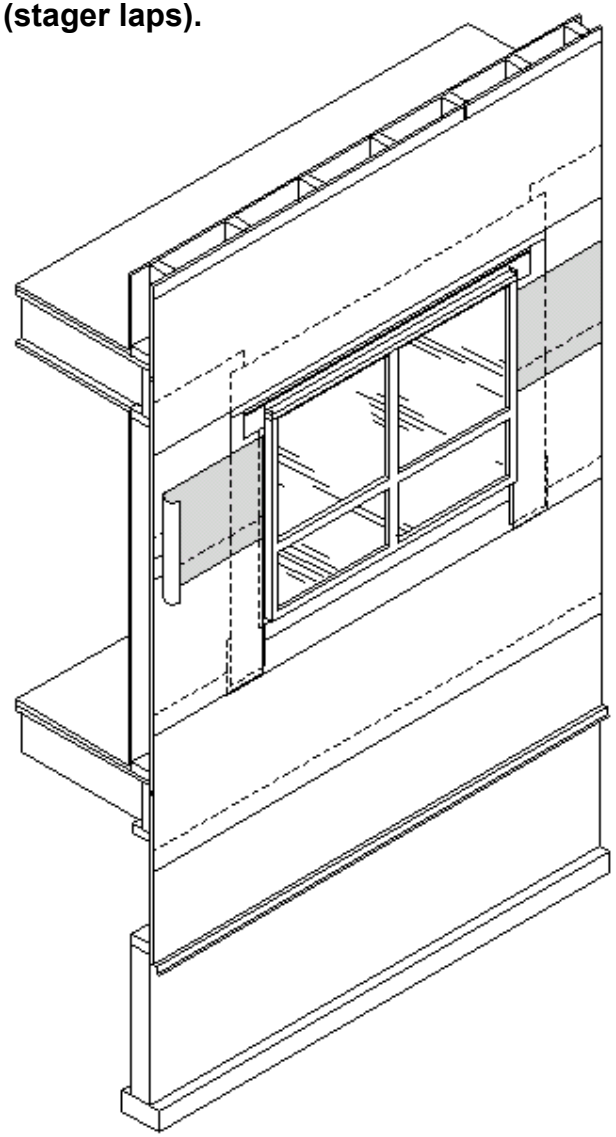

17 **Building paper installation second layer fourth row (stager laps).**

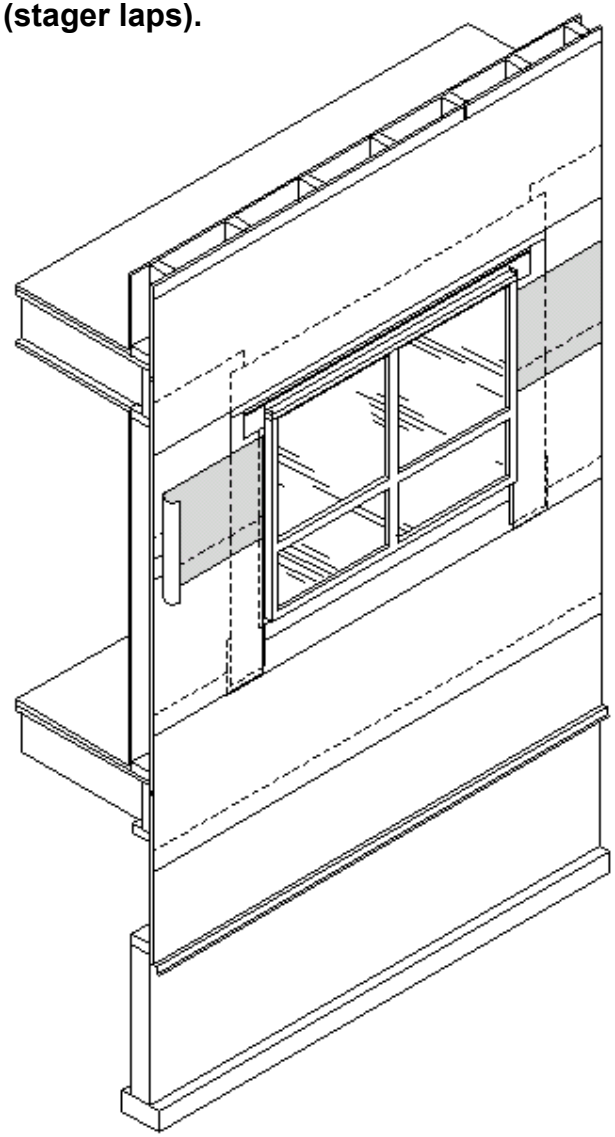

17 **Building paper installation second layer fourth row (stager laps).**

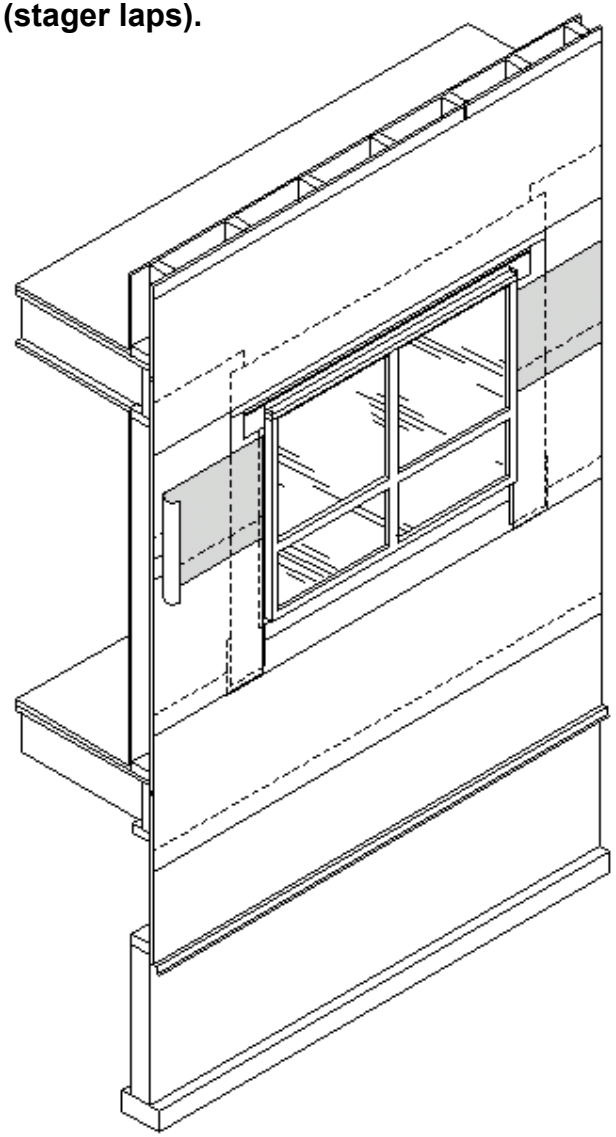

17 **Building paper installation second layer fourth row (stager laps).**

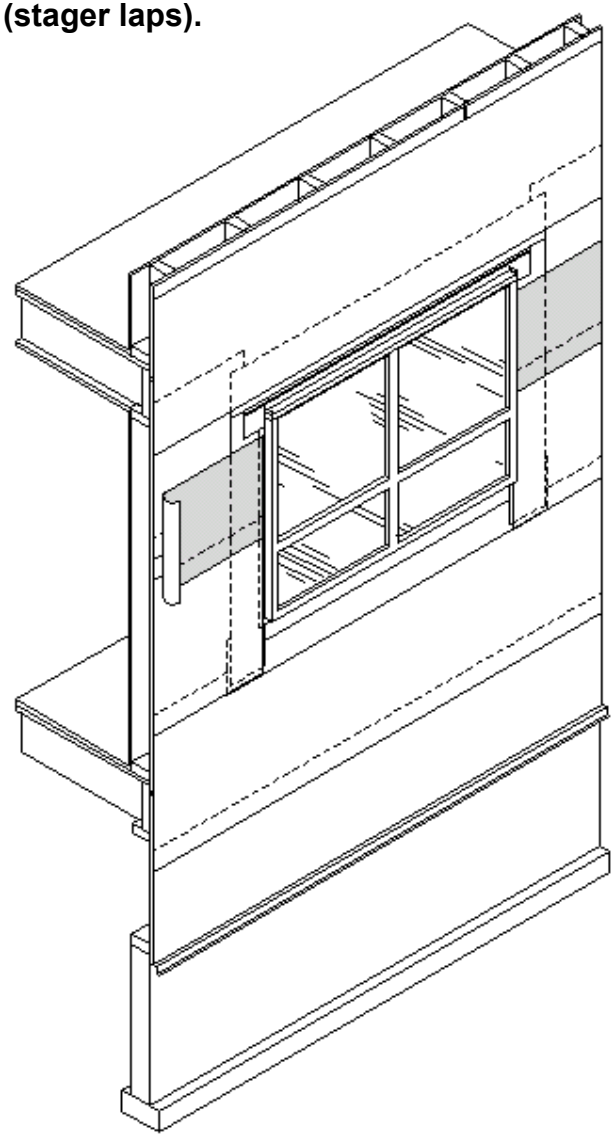

17 **Building paper installation second layer fourth row (stager laps).**

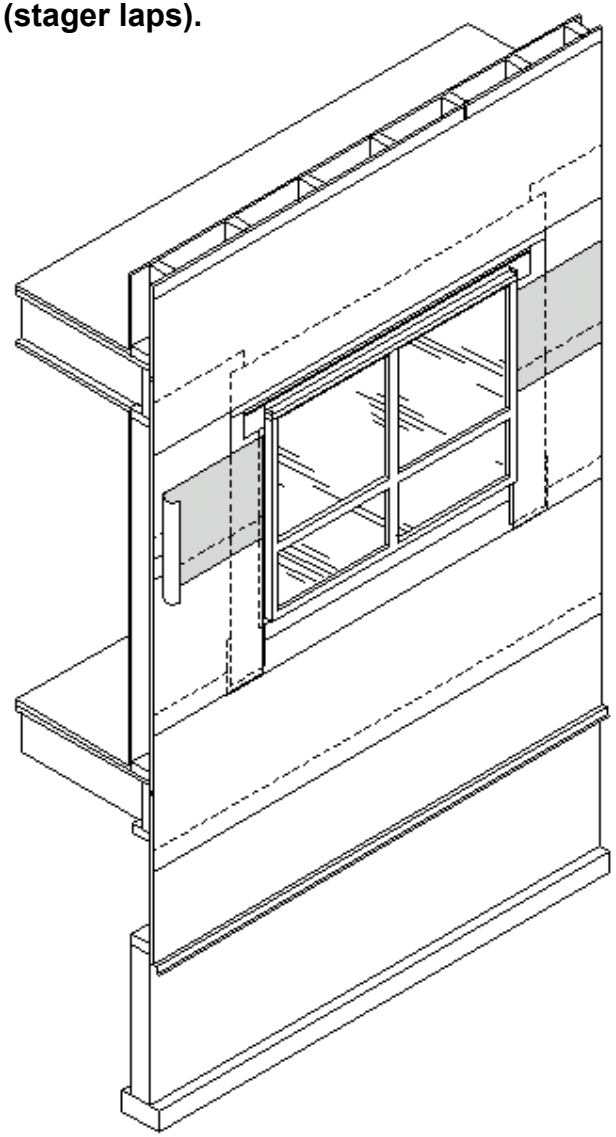

17 Building paper installation second layer fourth row (stager laps).

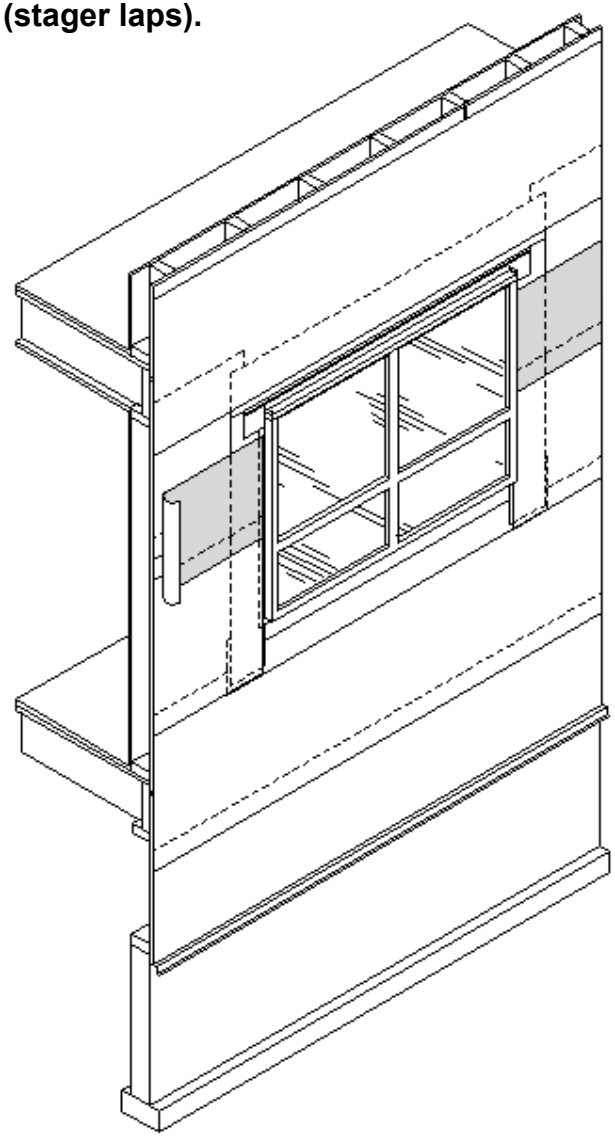

16

Building paper installation second layer third row (stager laps).

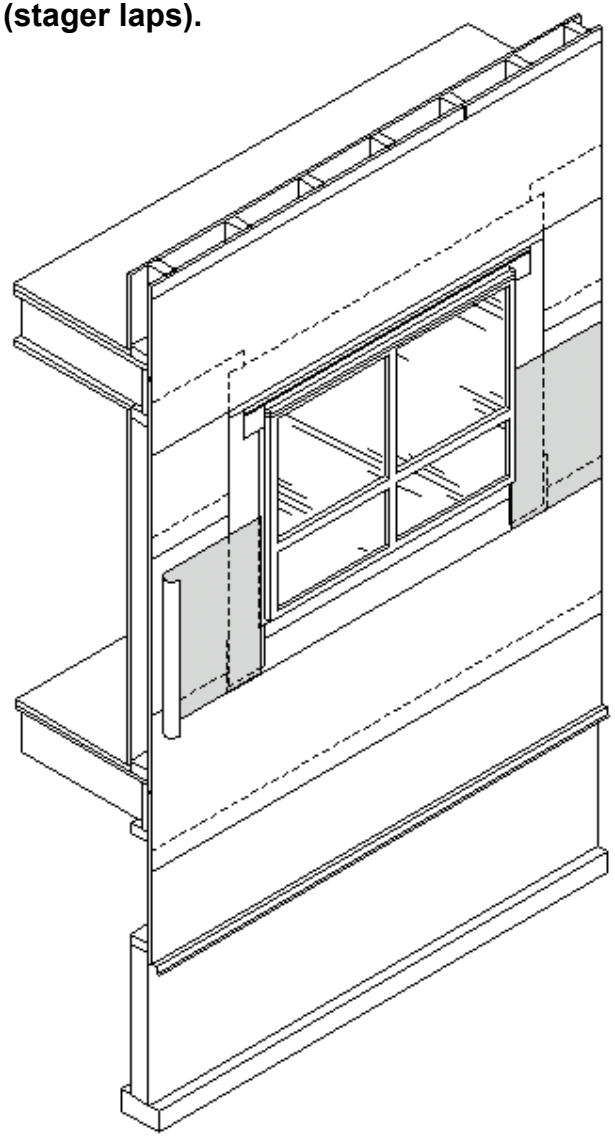

16 **Building paper installation second layer third row (stager laps).**

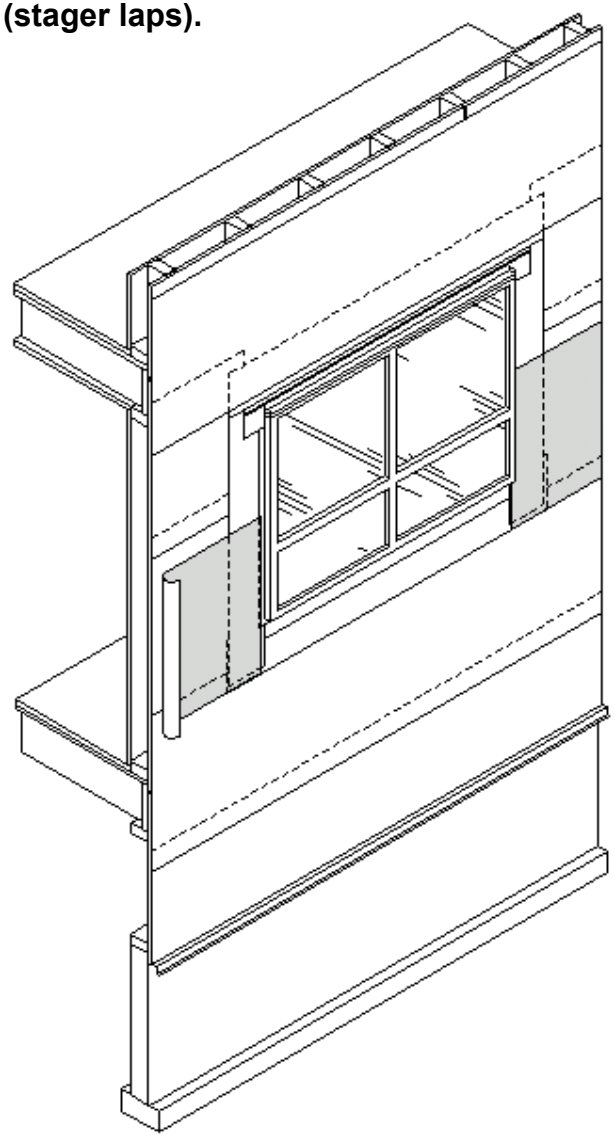

16

Building paper installation second layer third row (stager laps).

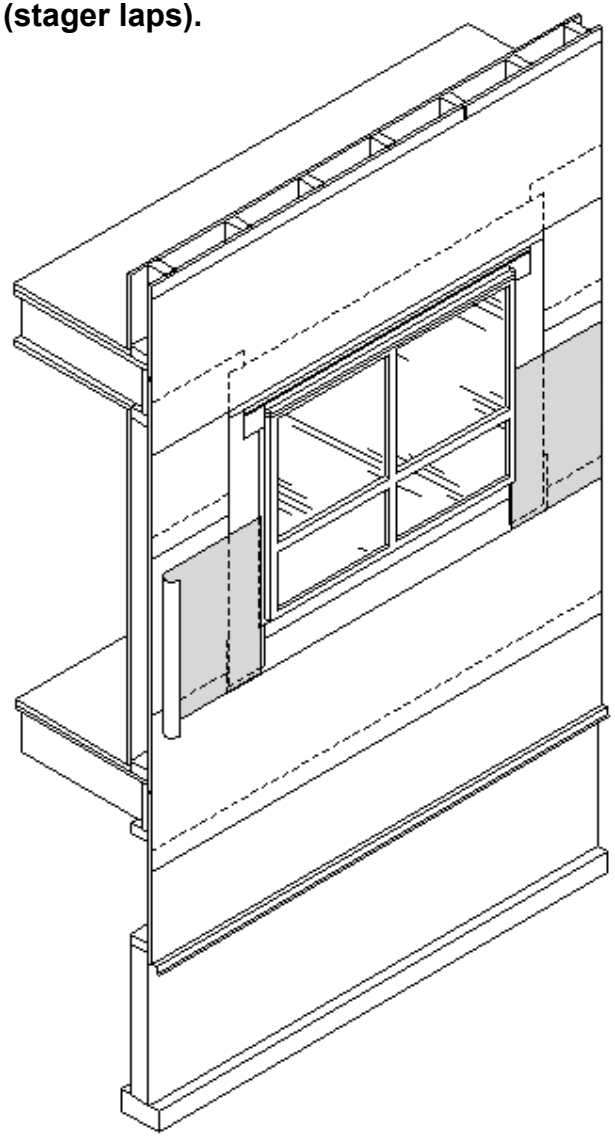

16 Building paper installation second layer third row (stager laps).

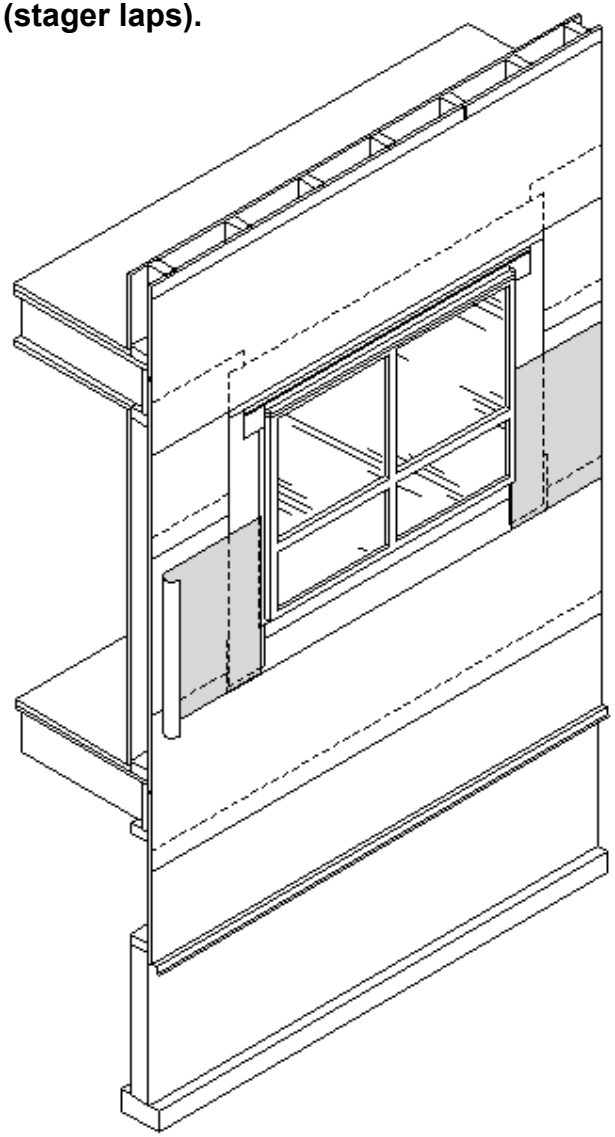

16 Building paper installation second layer third row (stager laps).

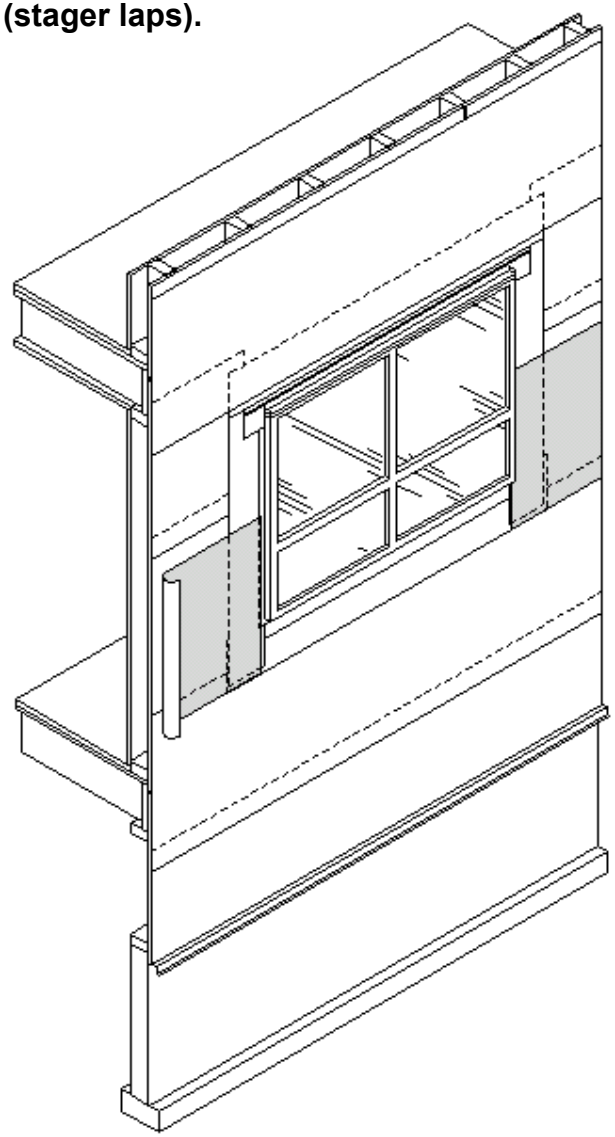

16

Building paper installation second layer third row (stager laps).

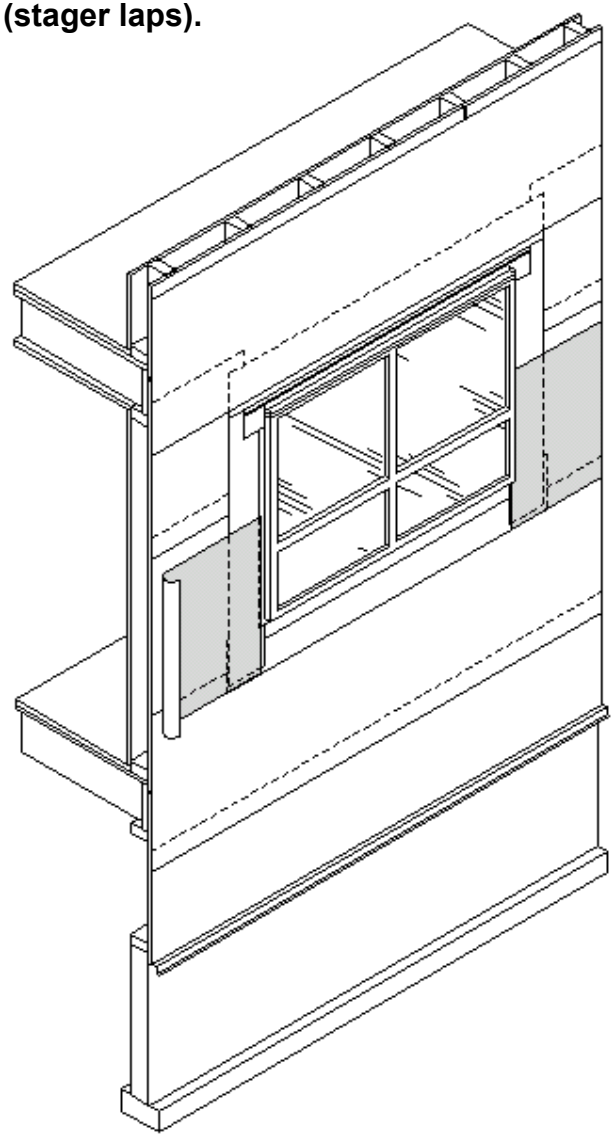

16

Building paper installation second layer third row (stager laps).

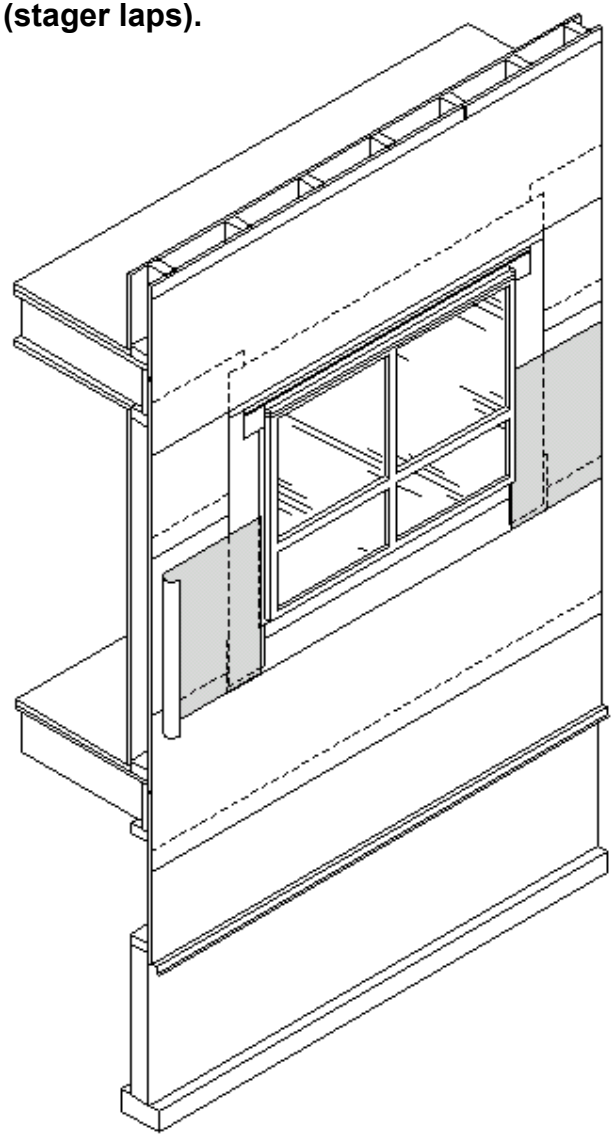

15

Building paper installation second layer second row (stager laps).

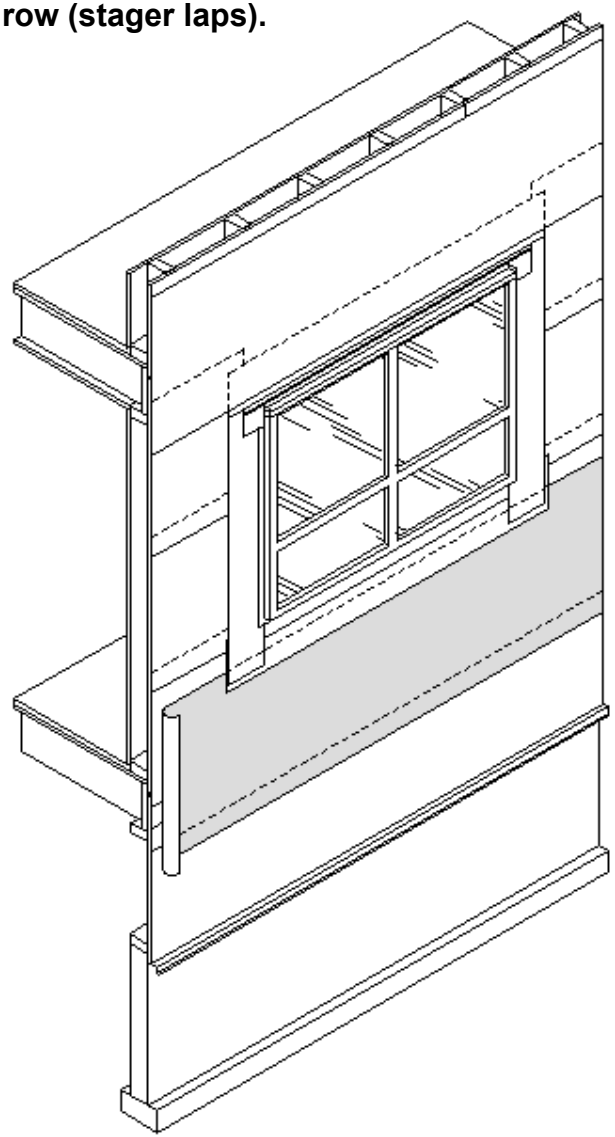

15 **Building paper installation second layer second row (stager laps).**

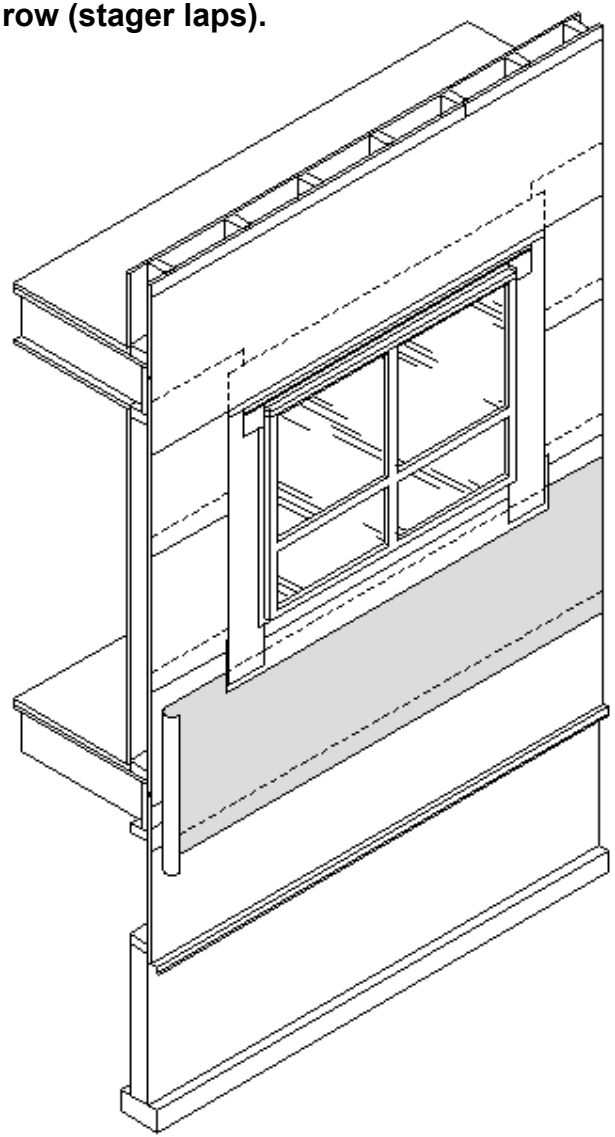

15 **Building paper installation second layer second row (stager laps).**

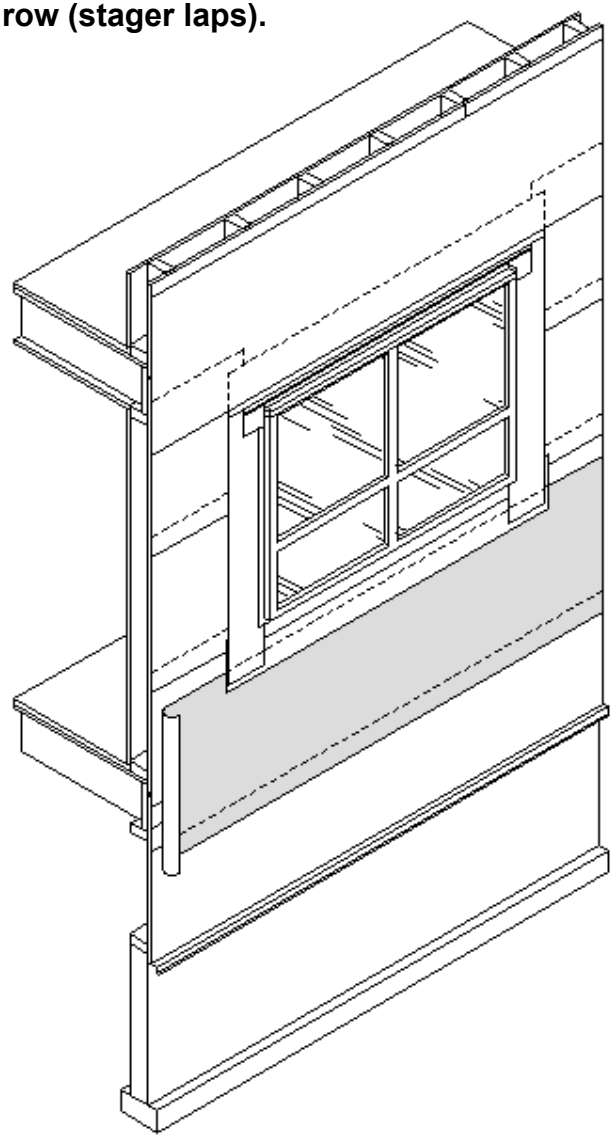

14

Building paper installation second layer first row (stager laps).

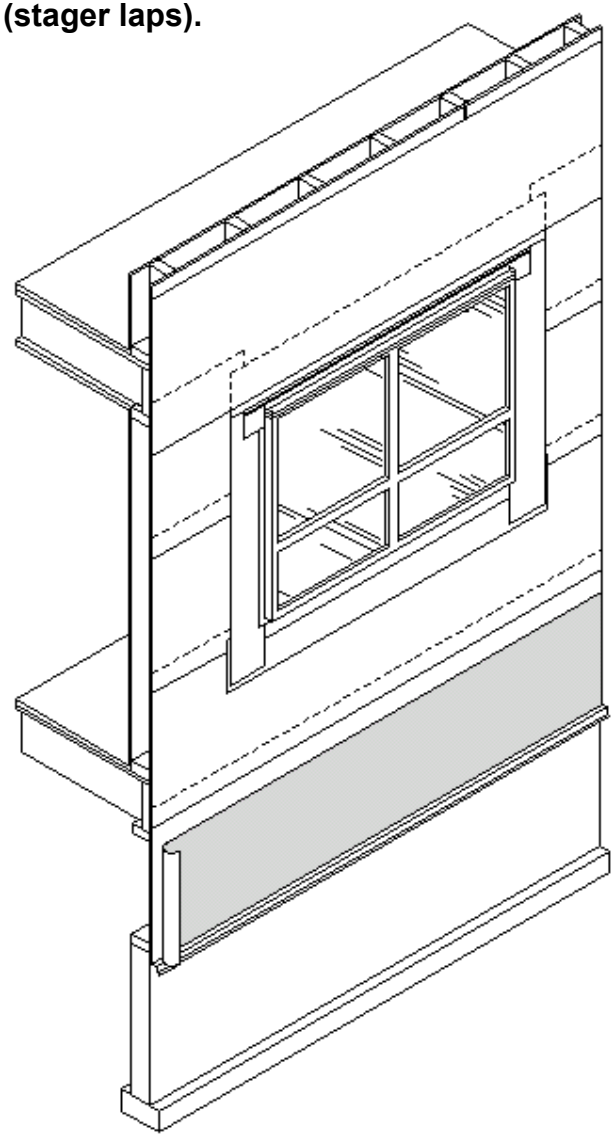

14 Building paper installation second layer first row (stager laps).

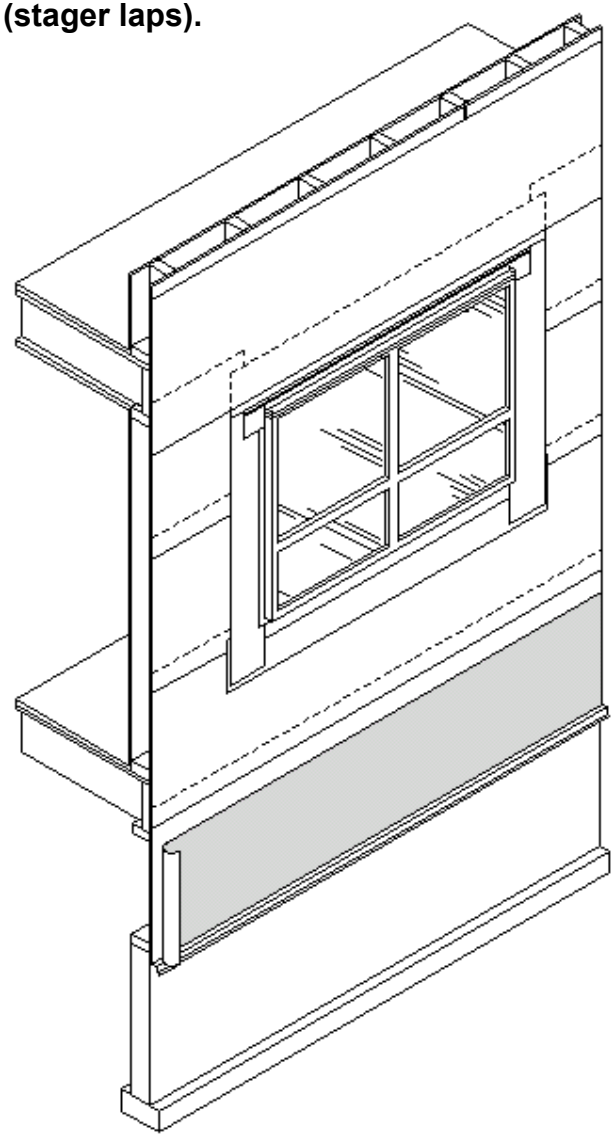

14 Building paper installation second layer first row (stager laps).

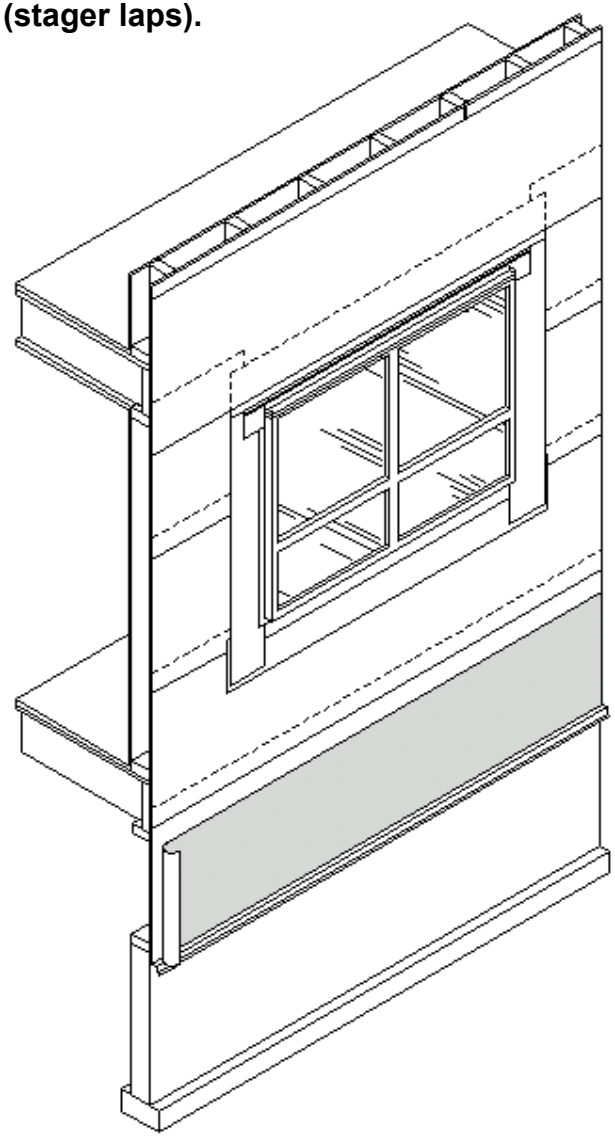

13

Building paper installation first layer fifth row.

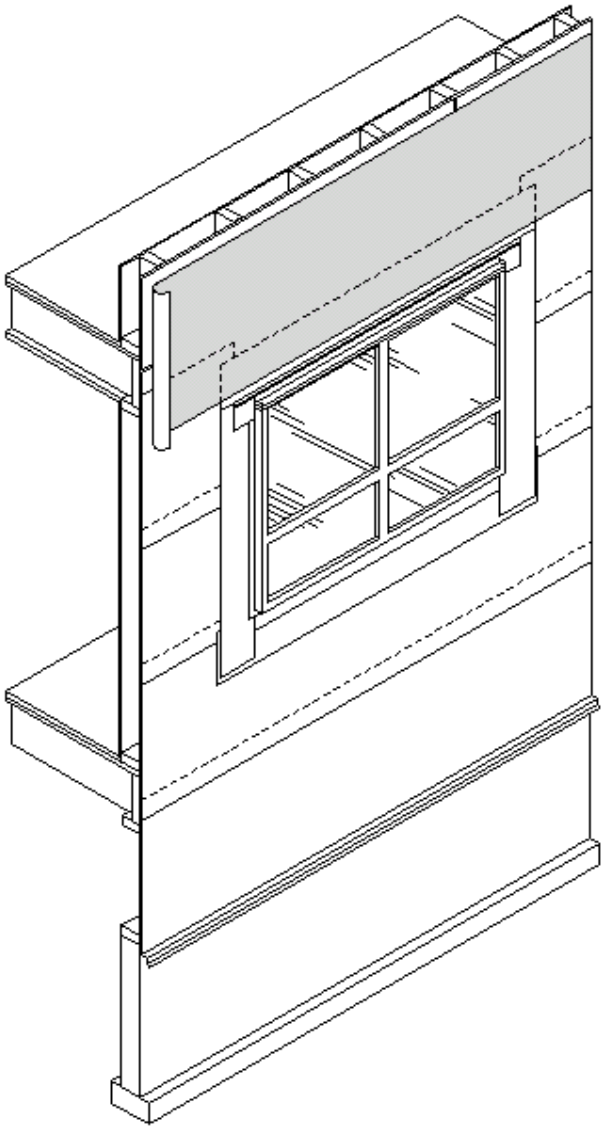

13 **Building paper installation first layer fifth row.**

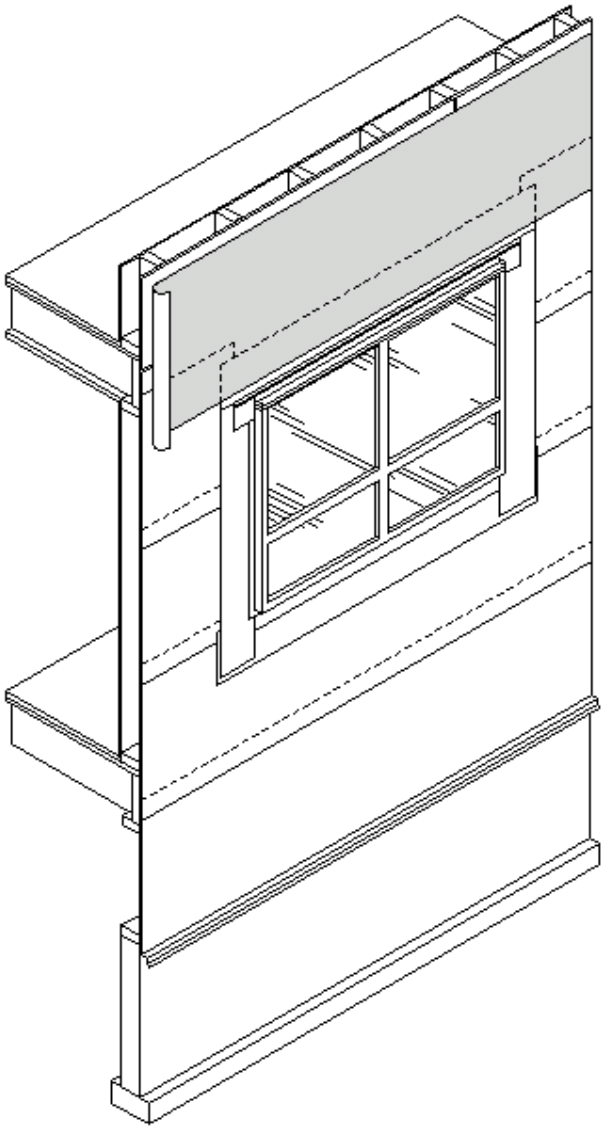

13 **Building paper installation first layer fifth row.**

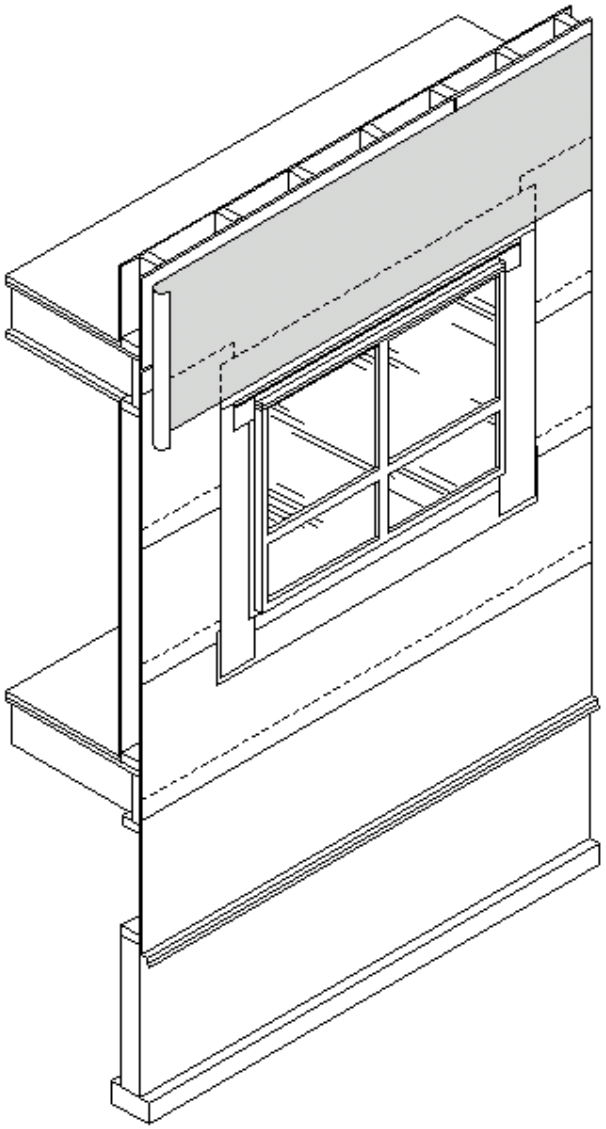

12 Building paper installation first layer fourth row.

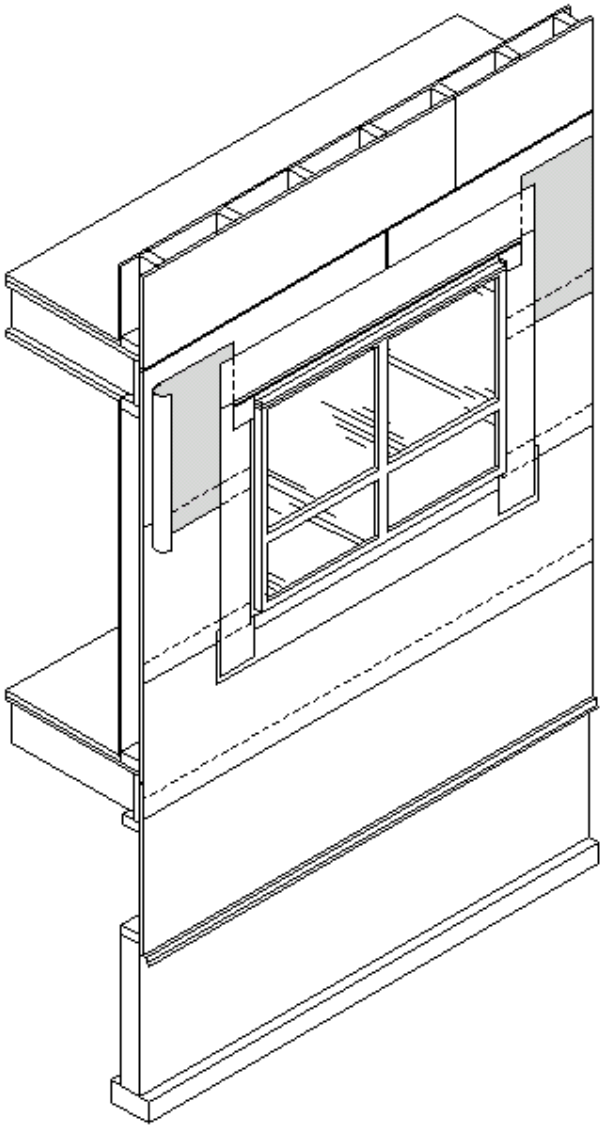

12 Building paper installation first layer fourth row.

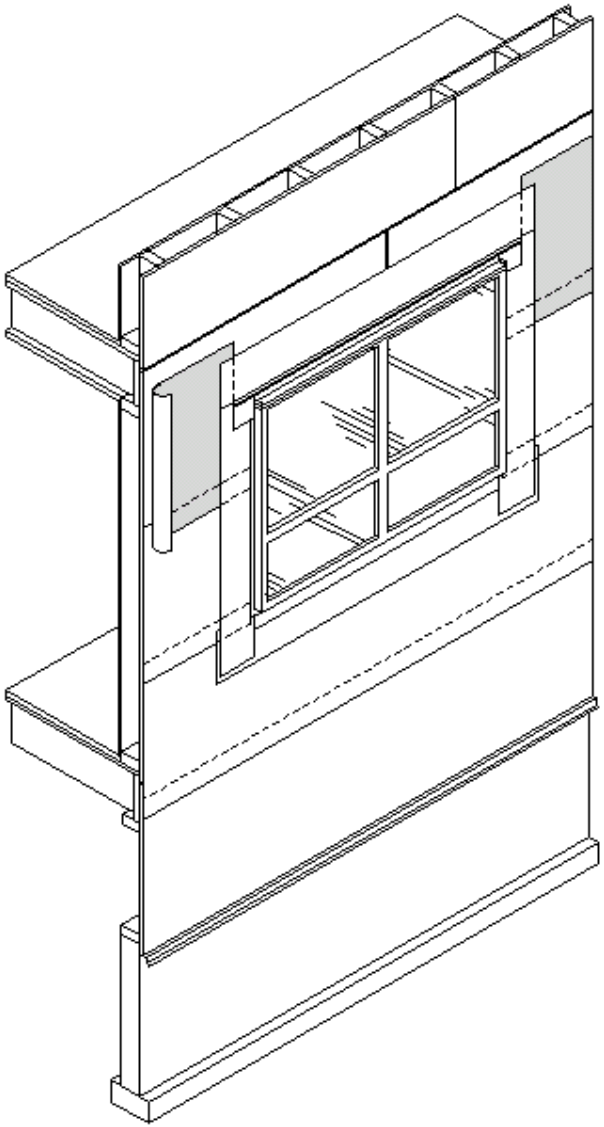

12 Building paper installation first layer fourth row.

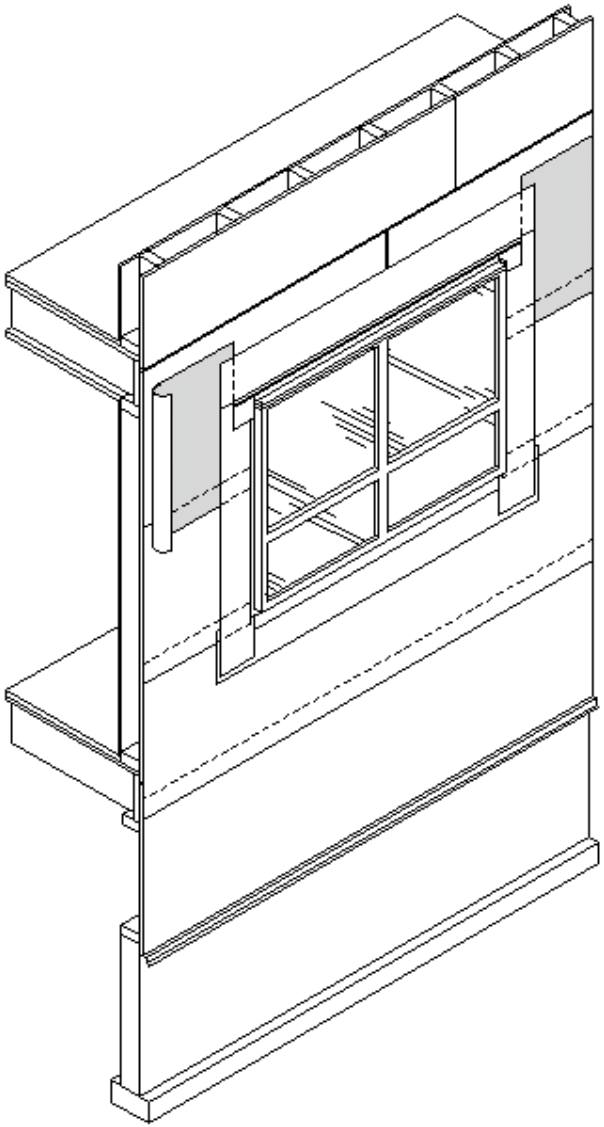

12 **Building paper installation first layer fourth row.**

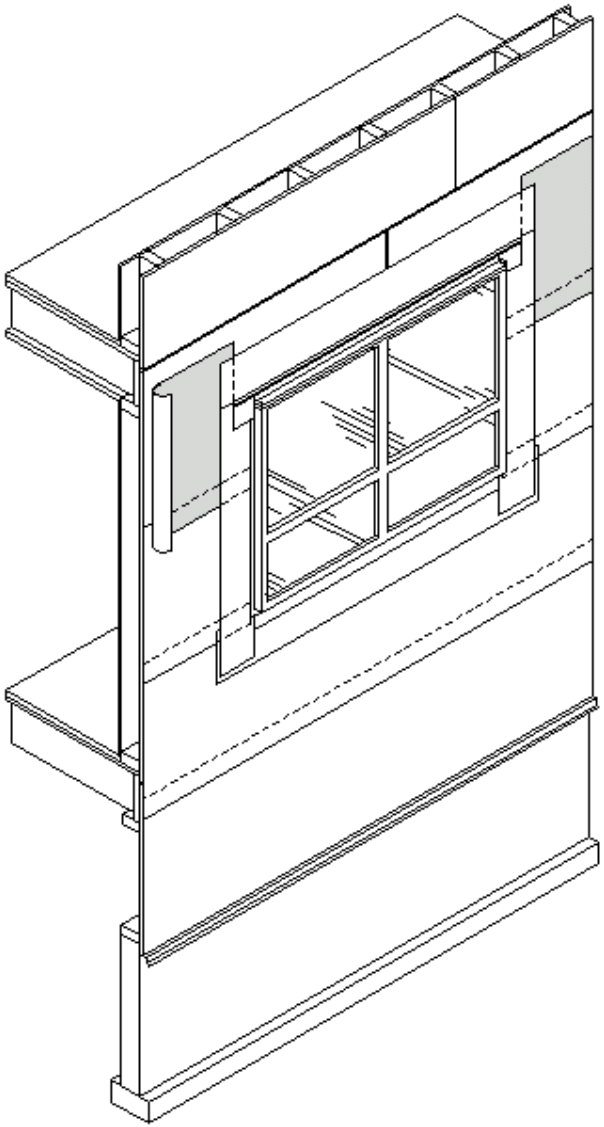

12 Building paper installation first layer fourth row.

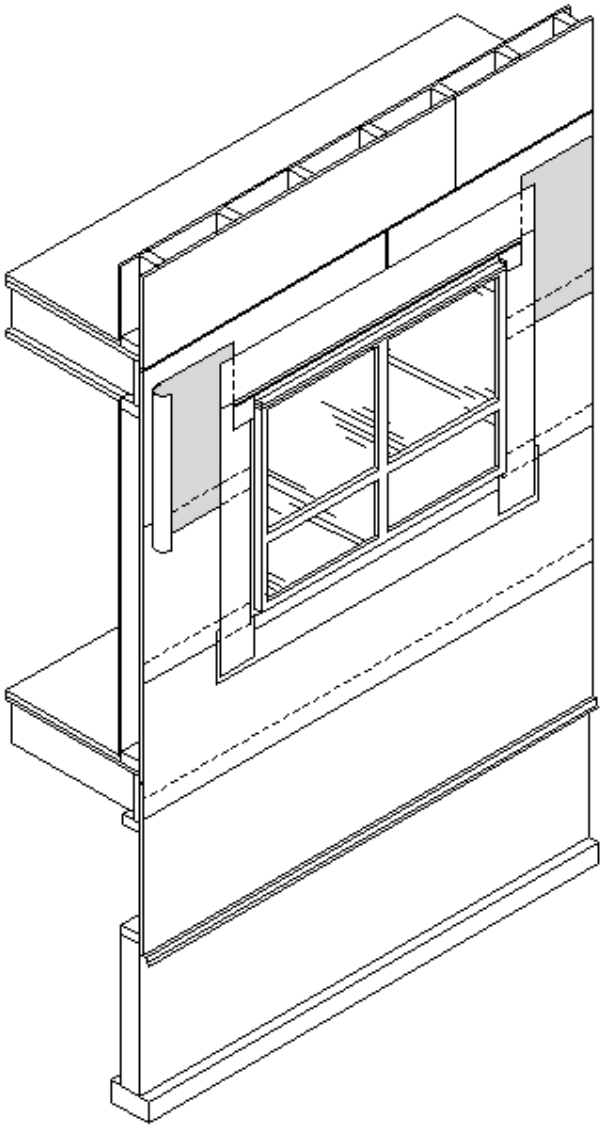

12 **Building paper installation first layer fourth row.**

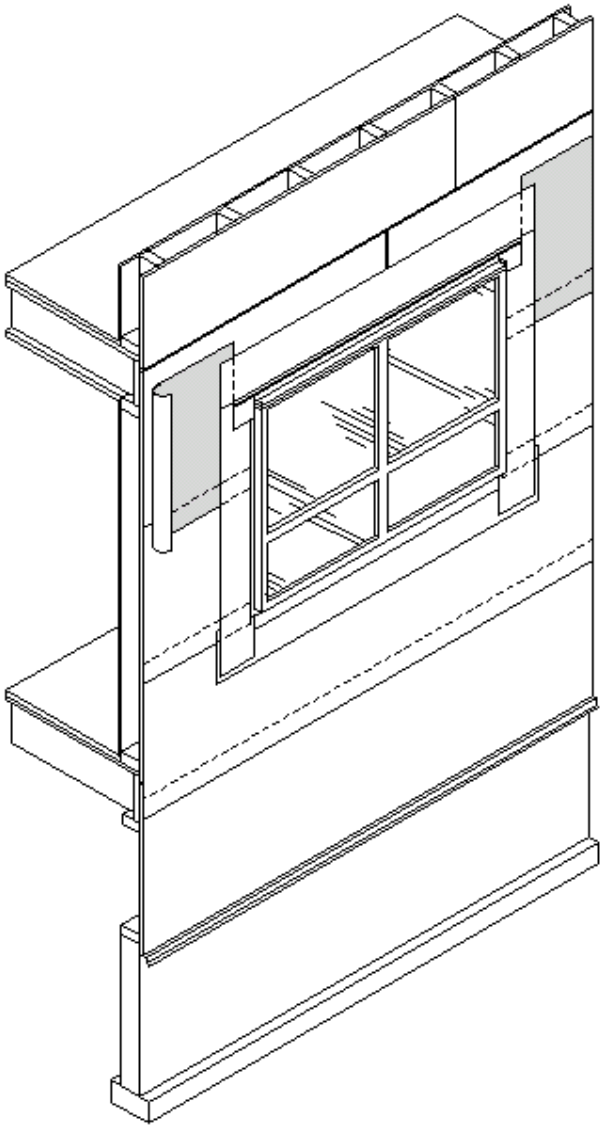

12 **Building paper installation first layer fourth row.**

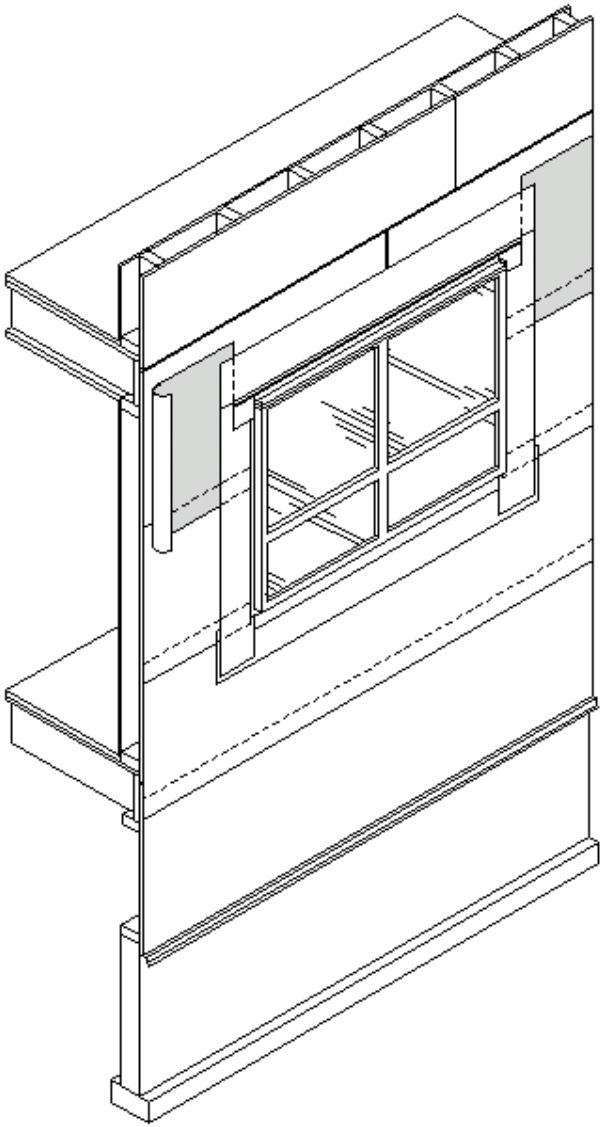

11

Building paper installation first layer third row.

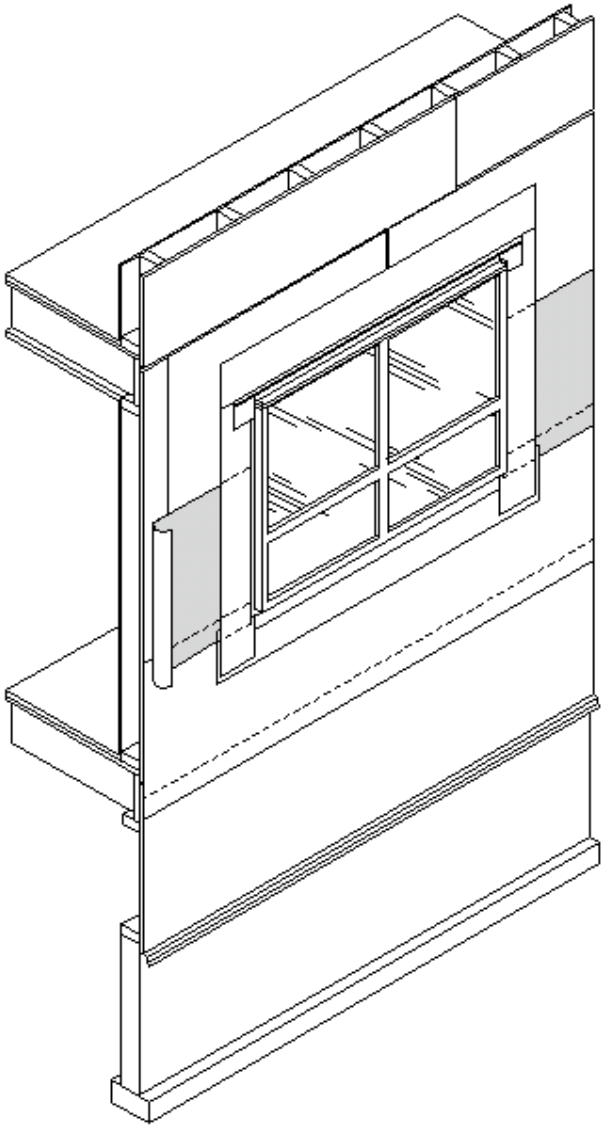

11 Building paper installation first layer third row.

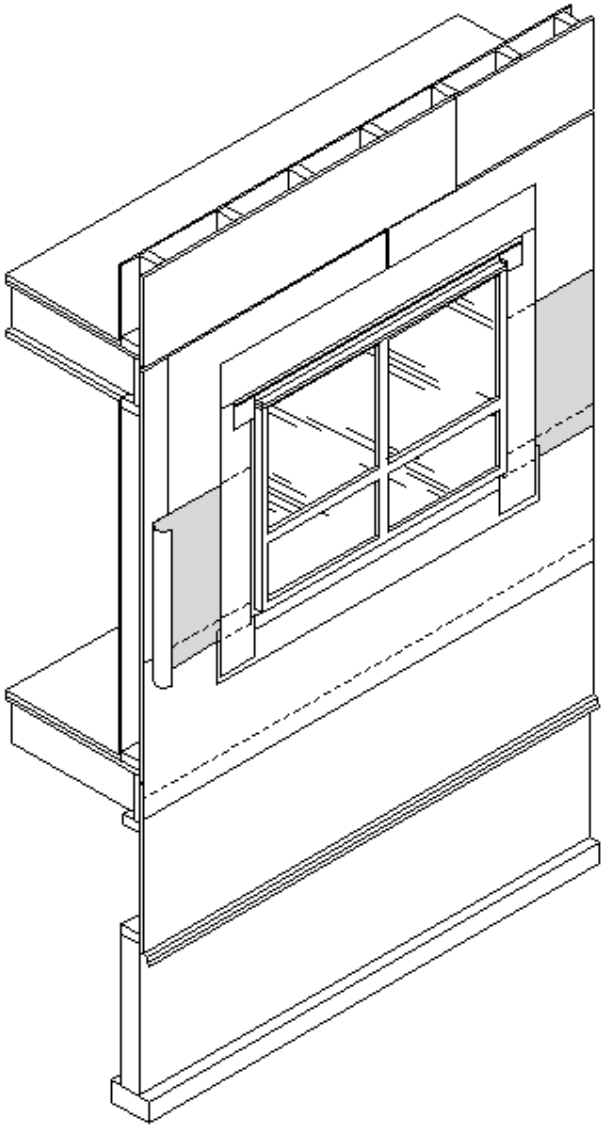

11 **Building paper installation first layer third row.**

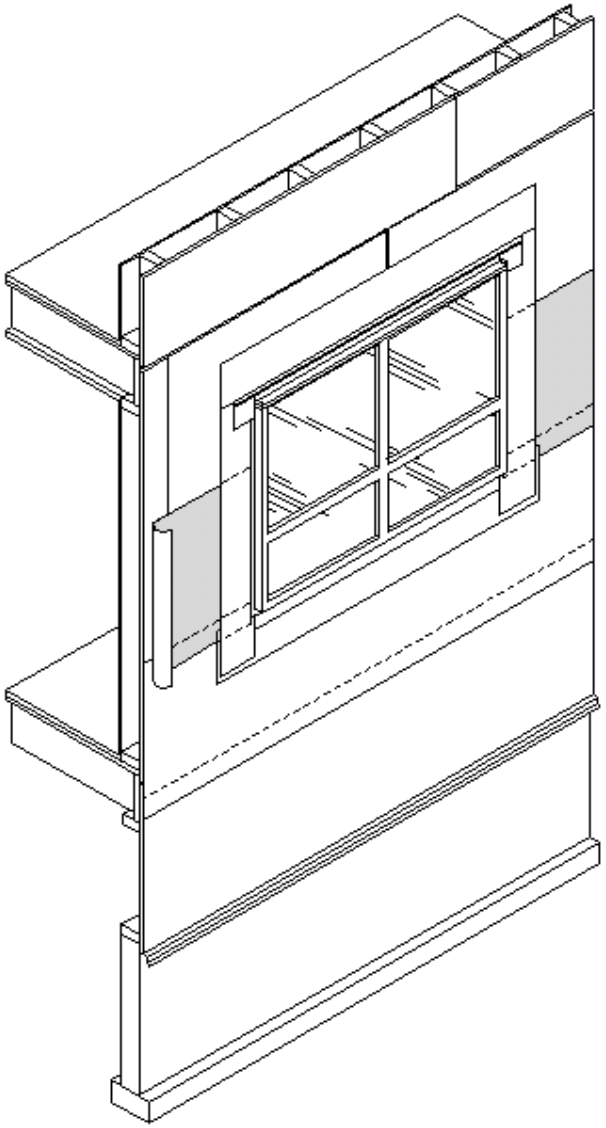

11 Building paper installation first layer third row.

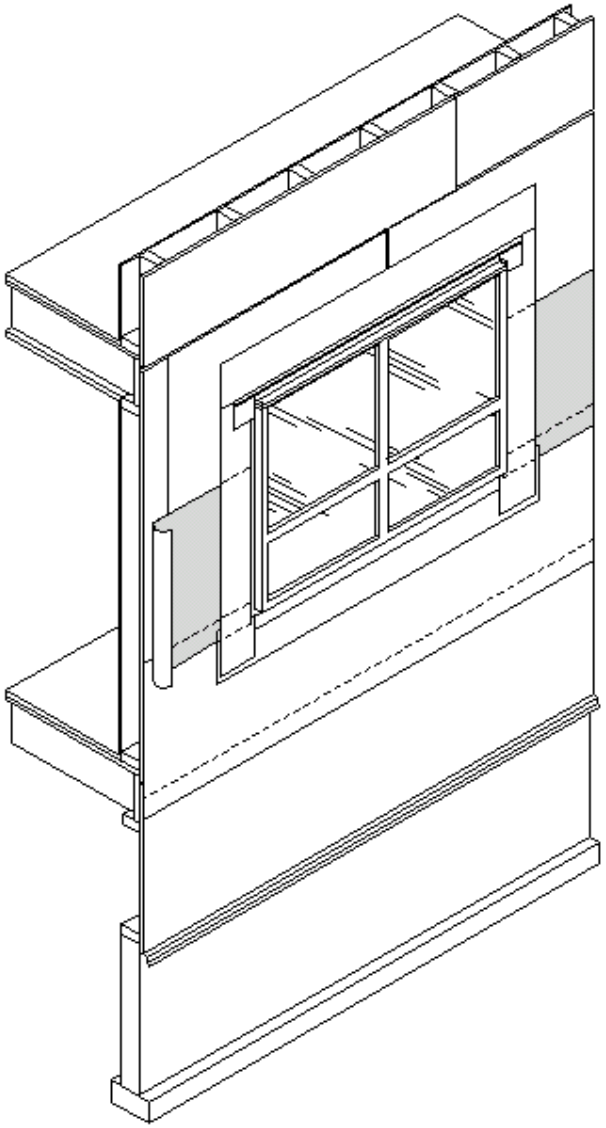

11

Building paper installation first layer third row.

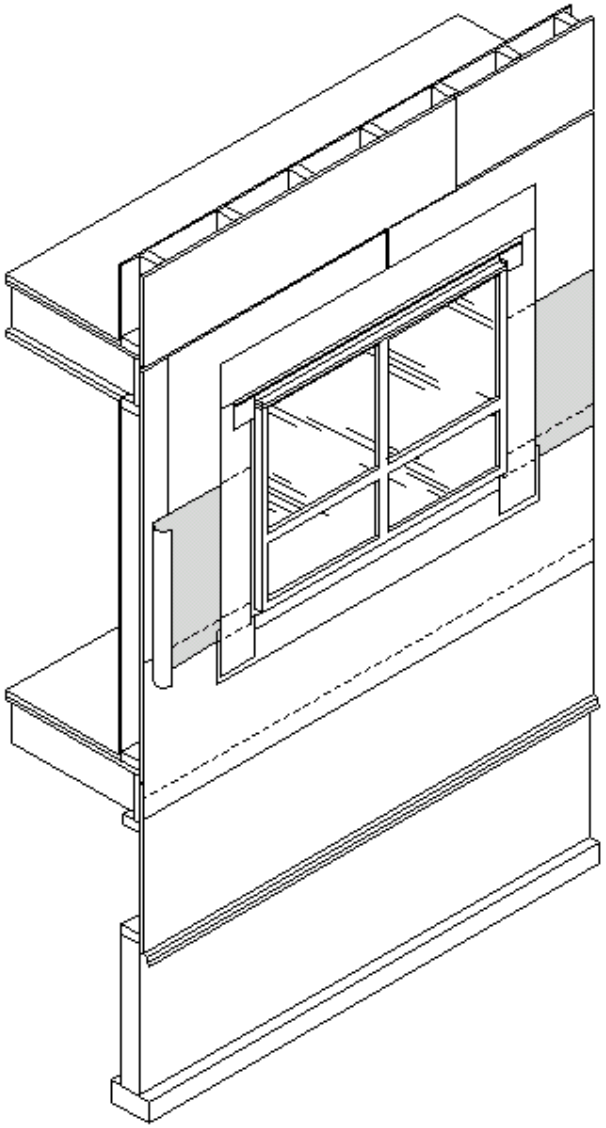

11 Building paper installation first layer third row.

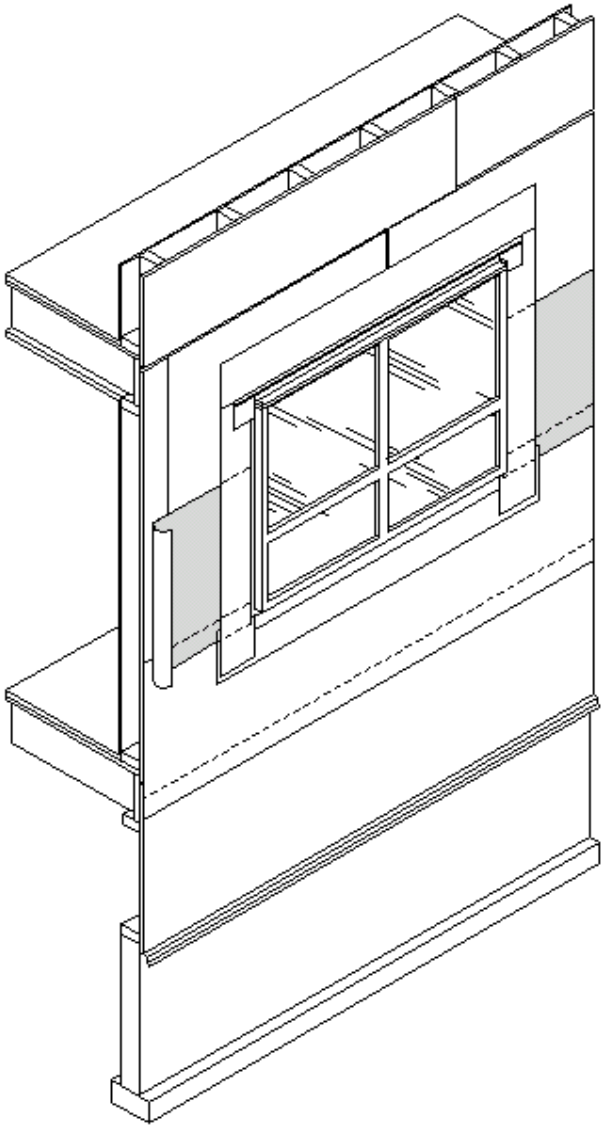

11

Building paper installation first layer third row.

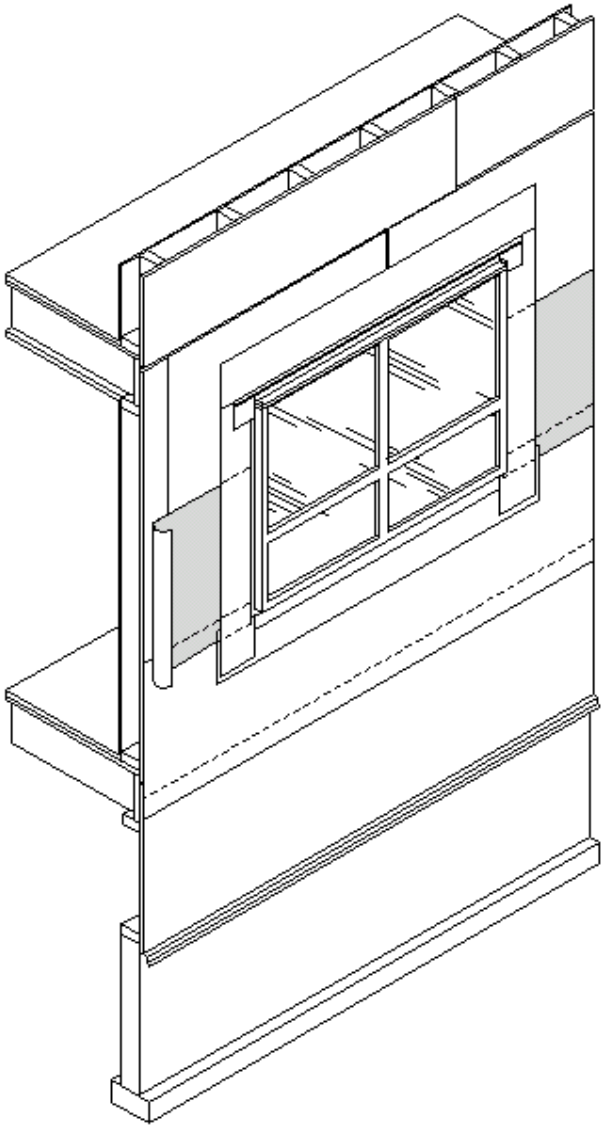

11

Building paper installation first layer third row.

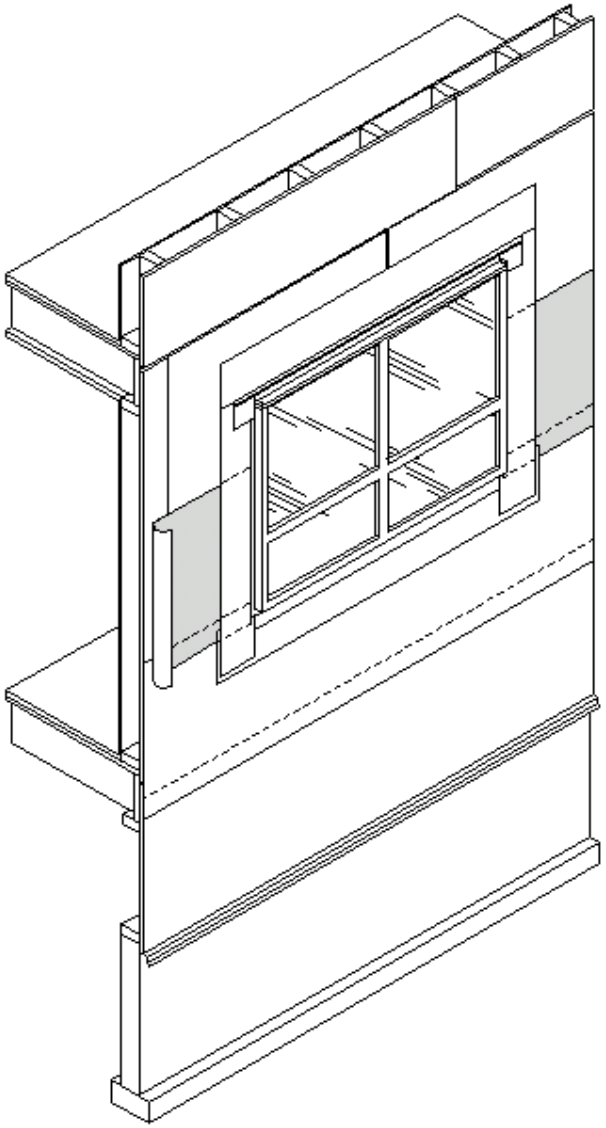

10 Building paper installation first layer second row.

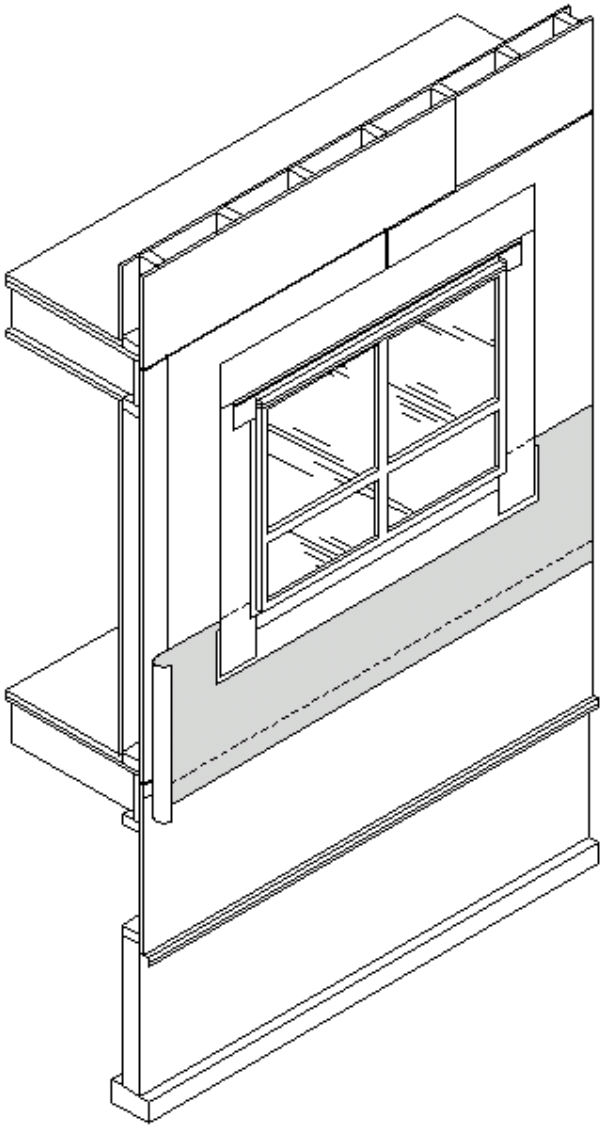

10 **Building paper installation first layer second row.**

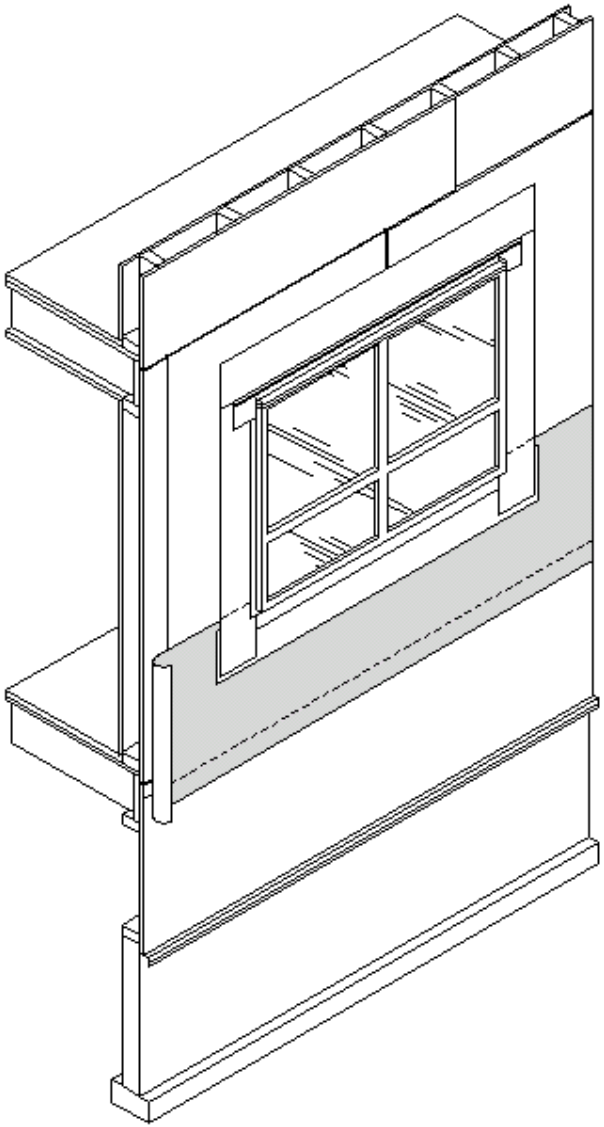

10 Building paper installation first layer second row.

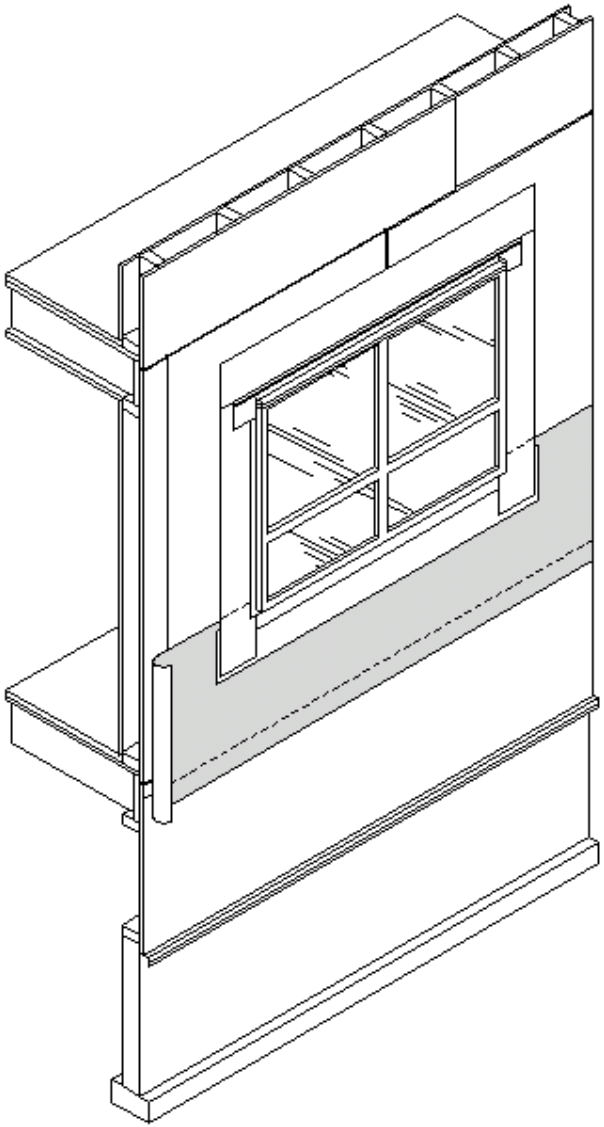

10 Building paper installation first layer second row.

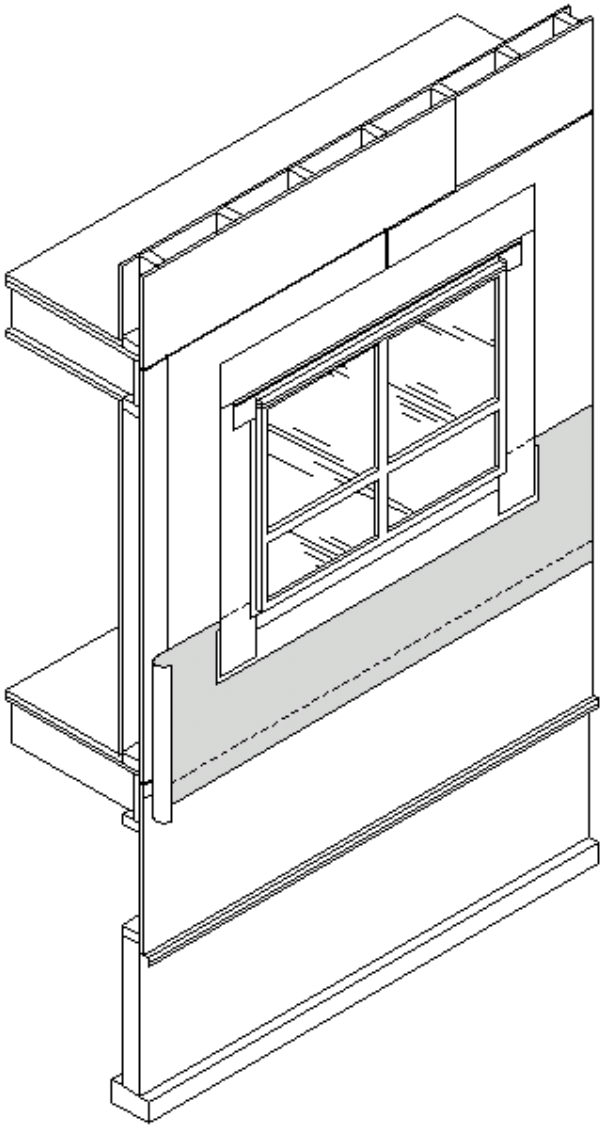

10 Building paper installation first layer second row.

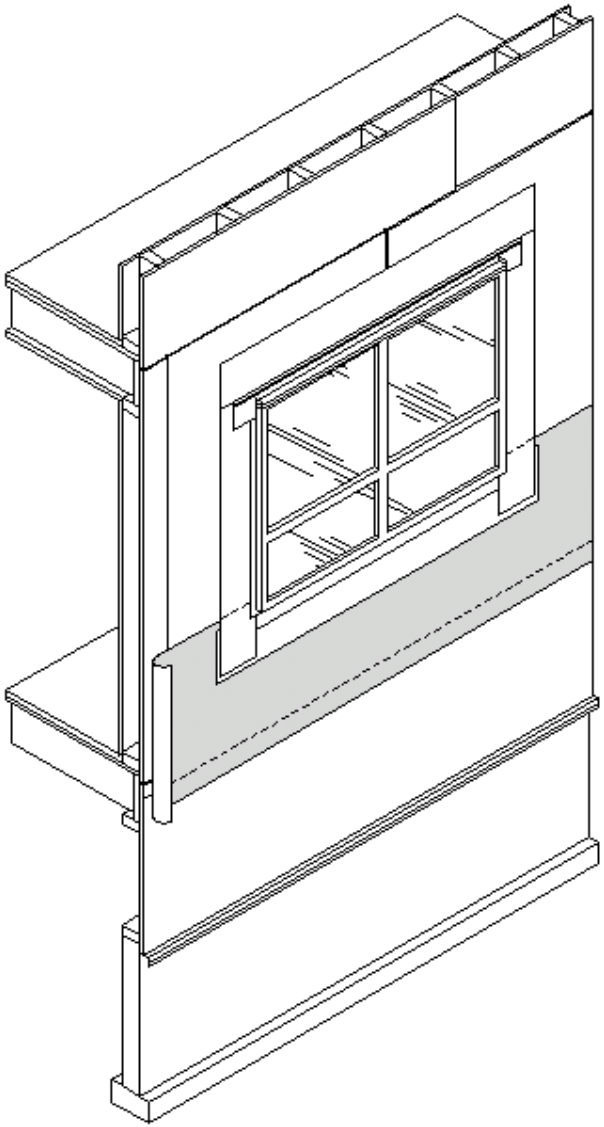

10 Building paper installation first layer second row.

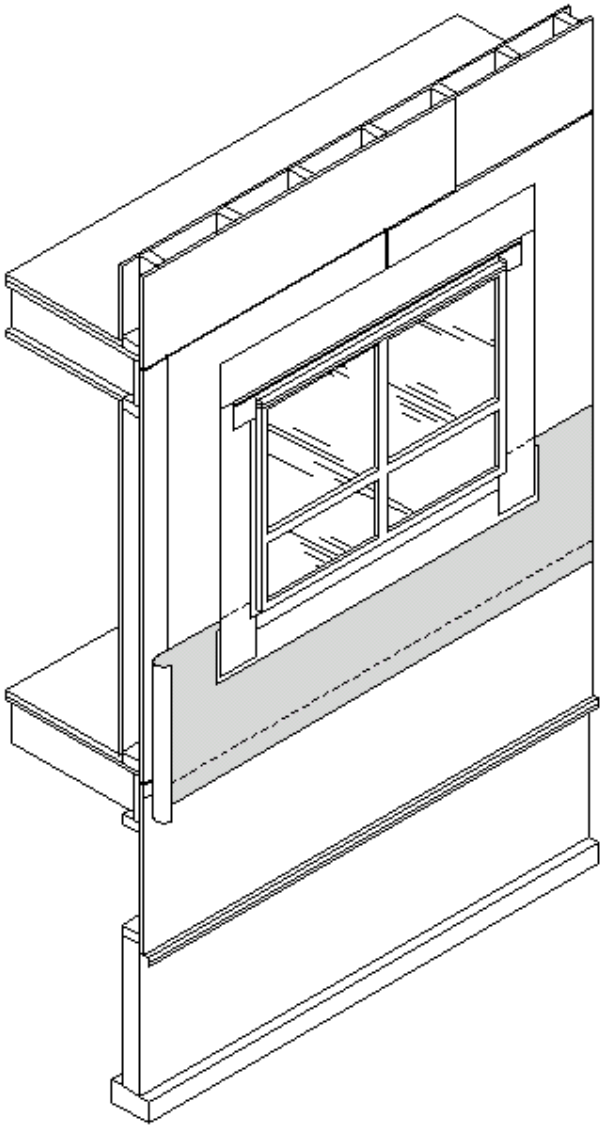

9 Building paper installation first layer first row.

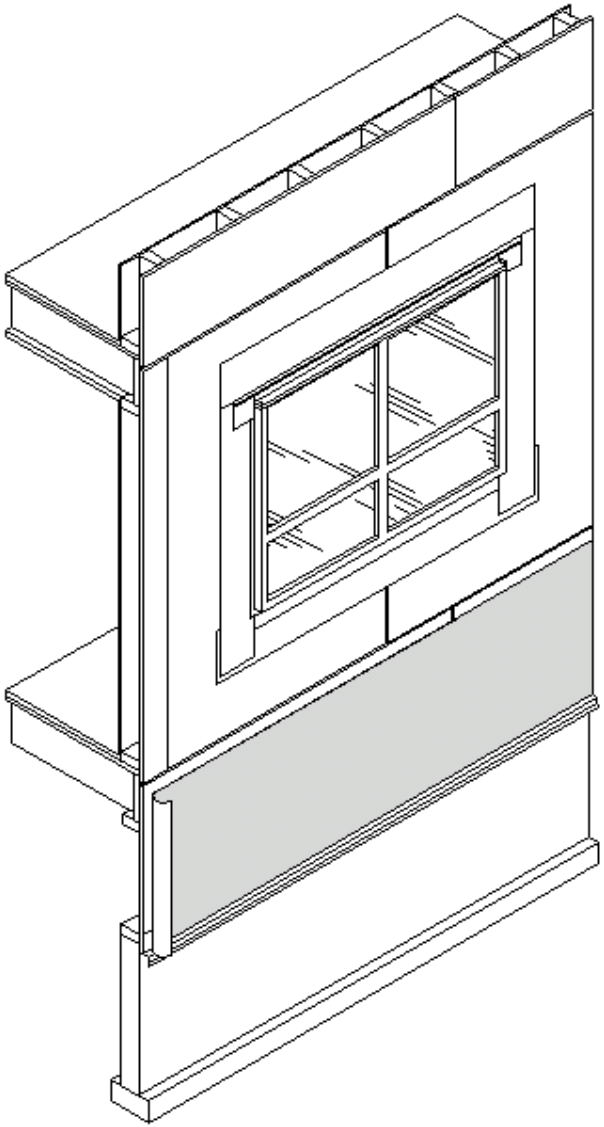

9 Building paper installation first layer first row.

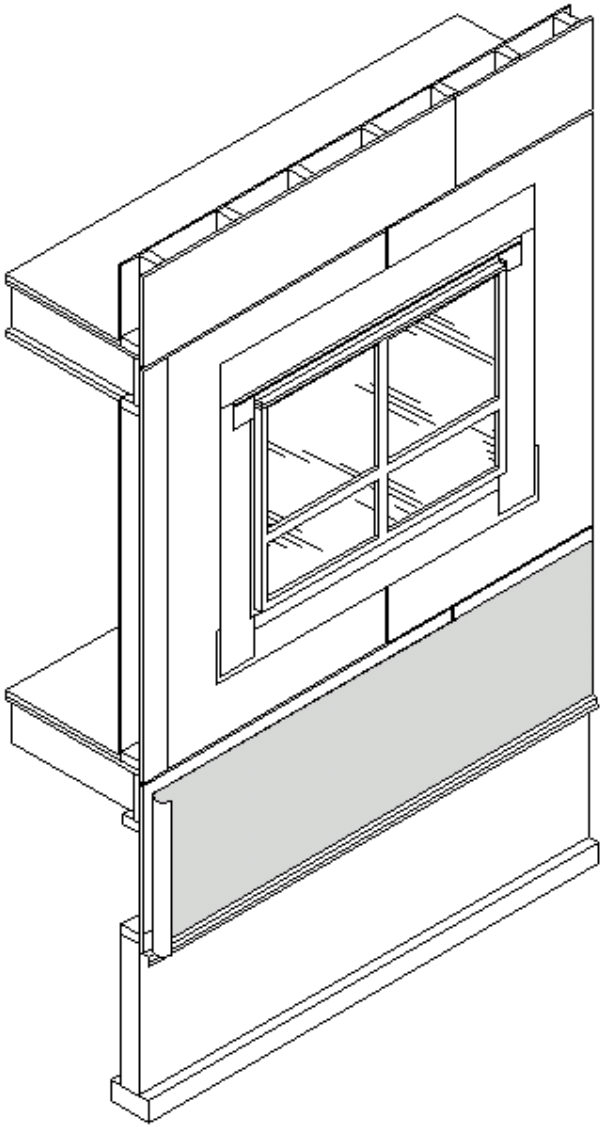

9 Building paper installation first layer first row.

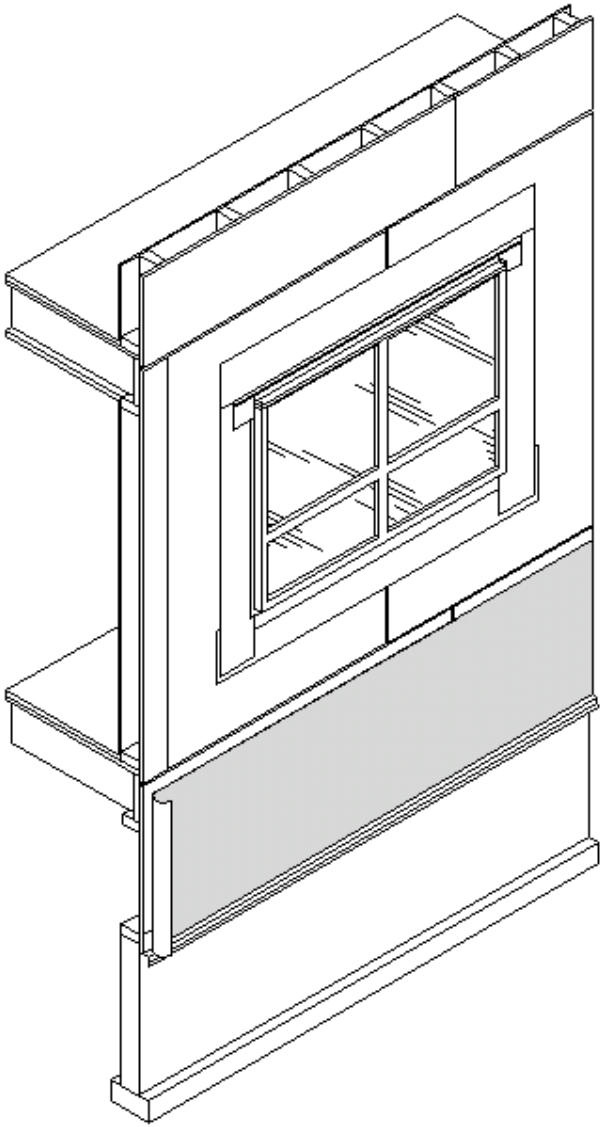

9 Building paper installation first layer first row.

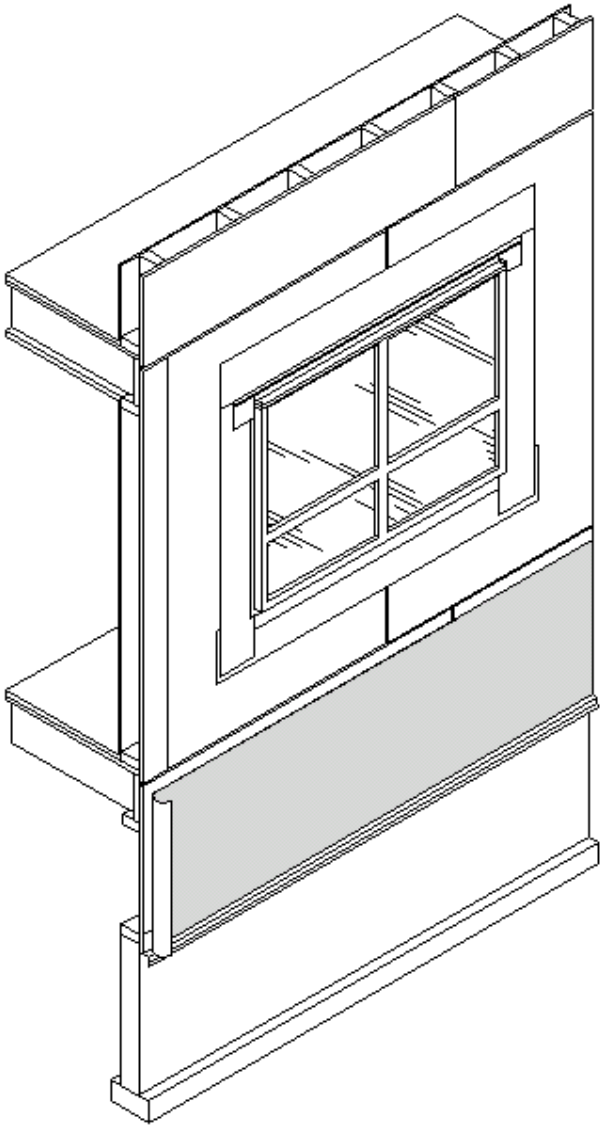

8 **Begin building installation paper with drip edge flashing.**

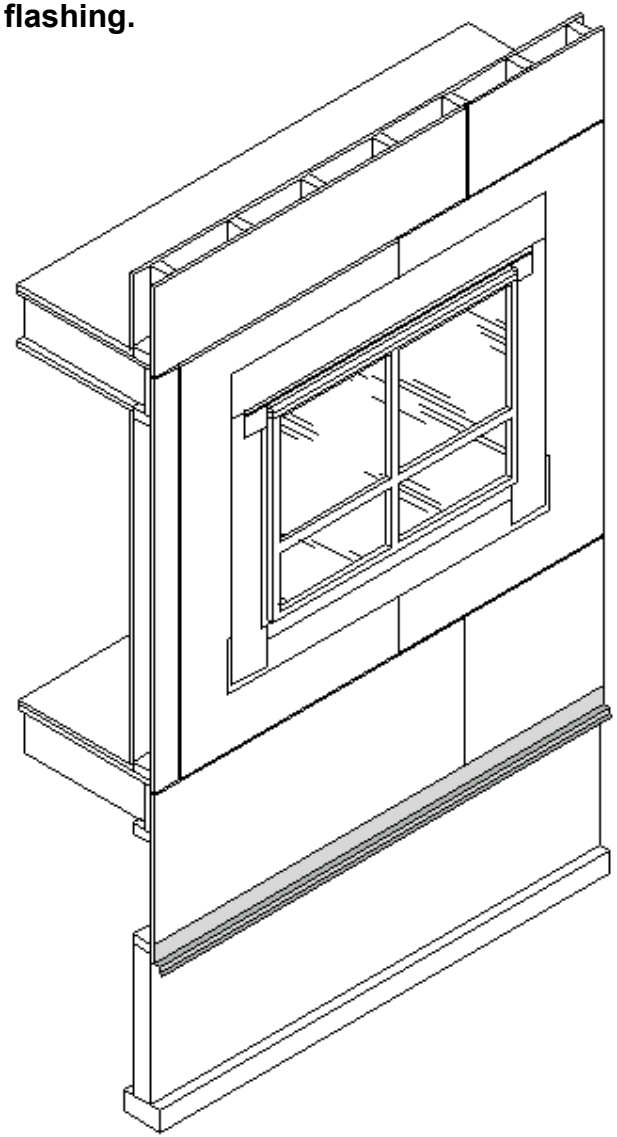

7

Install Peel-n-Stick above from substrate to head flashing.

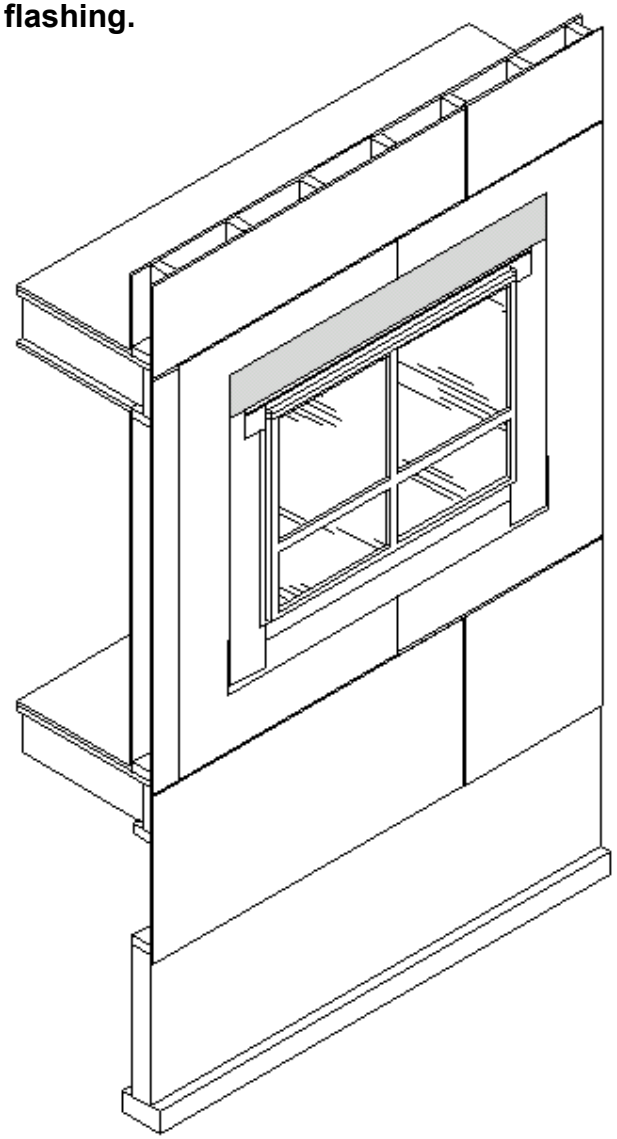

7

Install Peel-n-Stick above from substrate to head flashing.

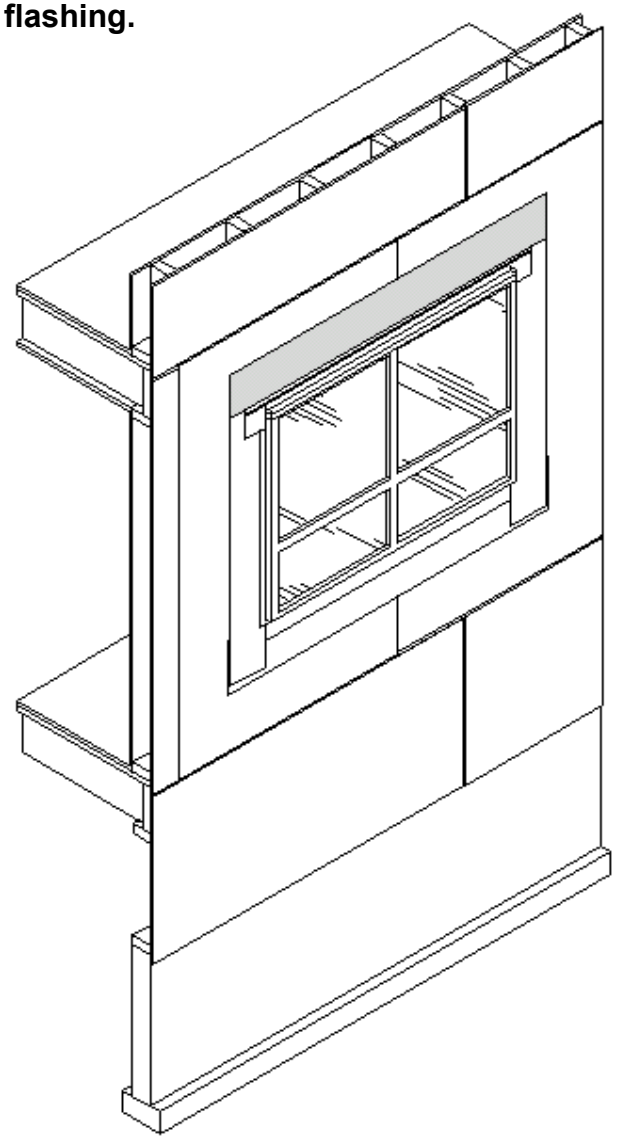

7

Install Peel-n-Stick above from substrate to head flashing.

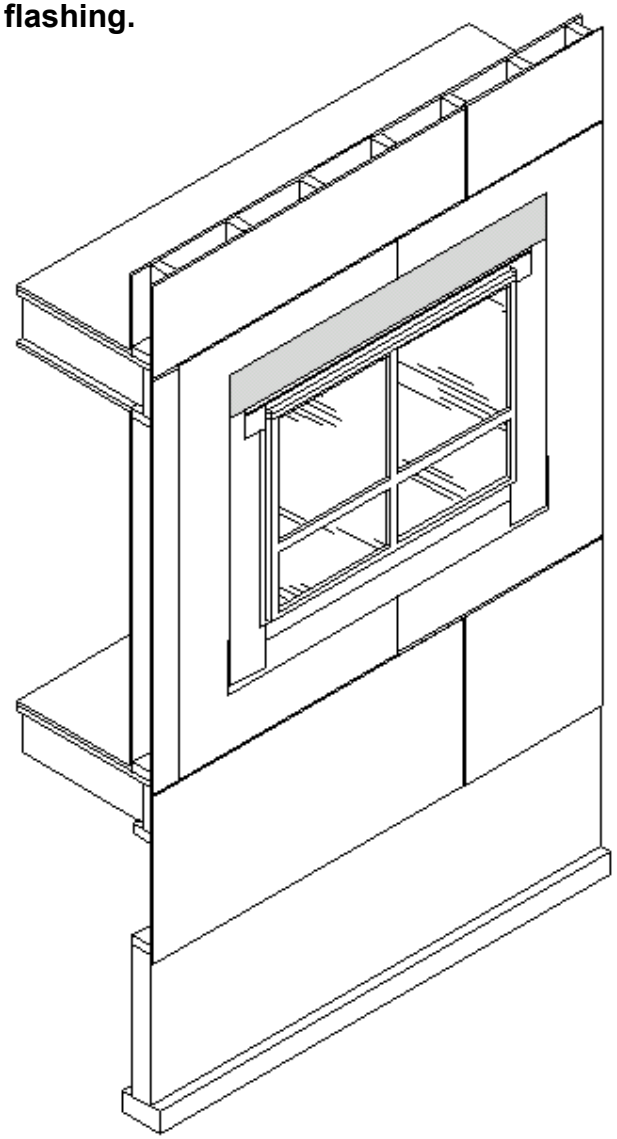

7

Install Peel-n-Stick above from substrate to head flashing.

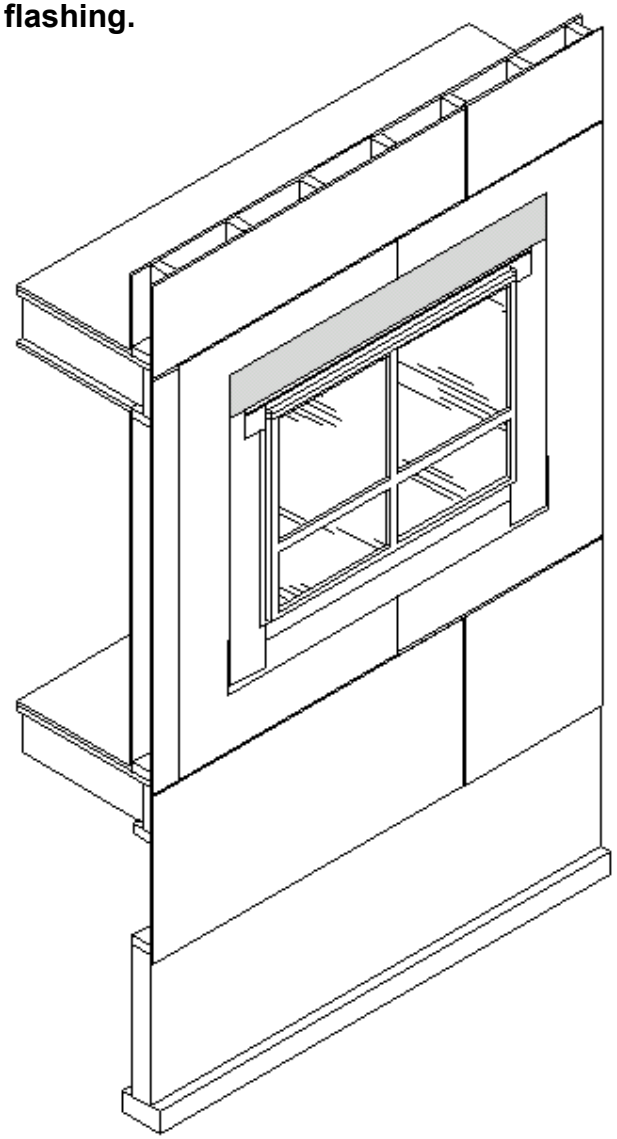

7

Install Peel-n-Stick above from substrate to head flashing.

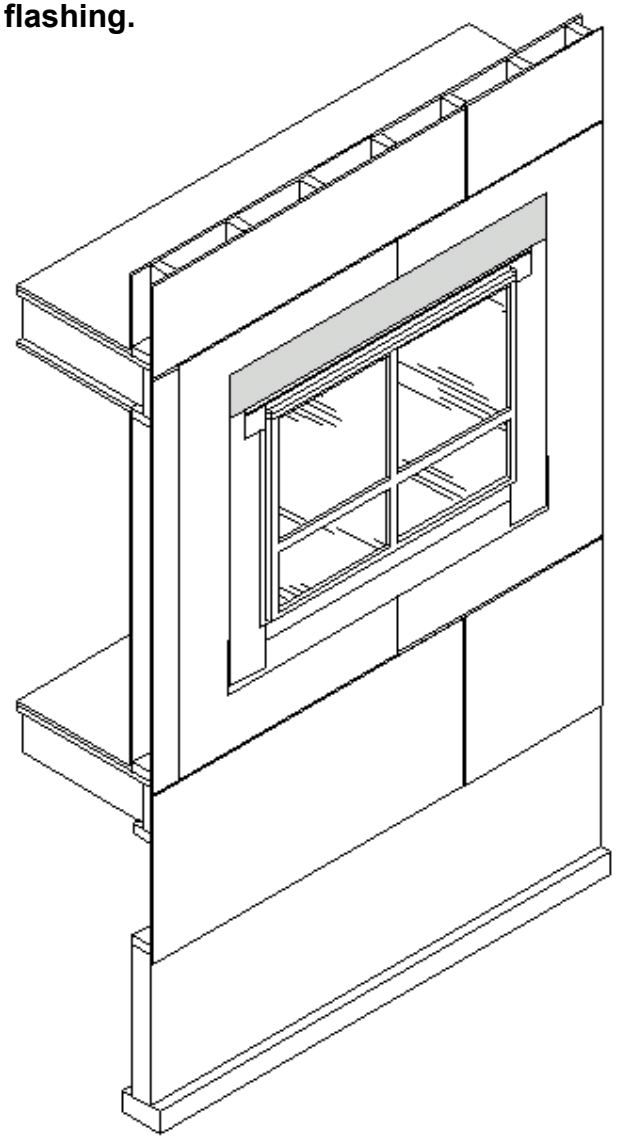

6 Install sheet metal head flashing.

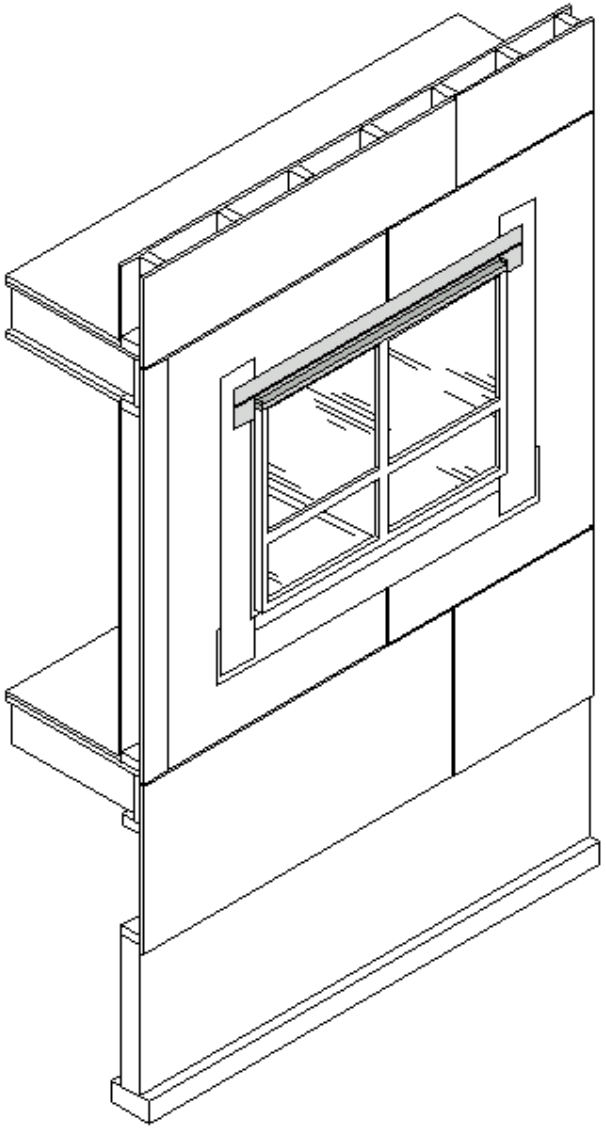

6 **Install sheet metal head flashing.**

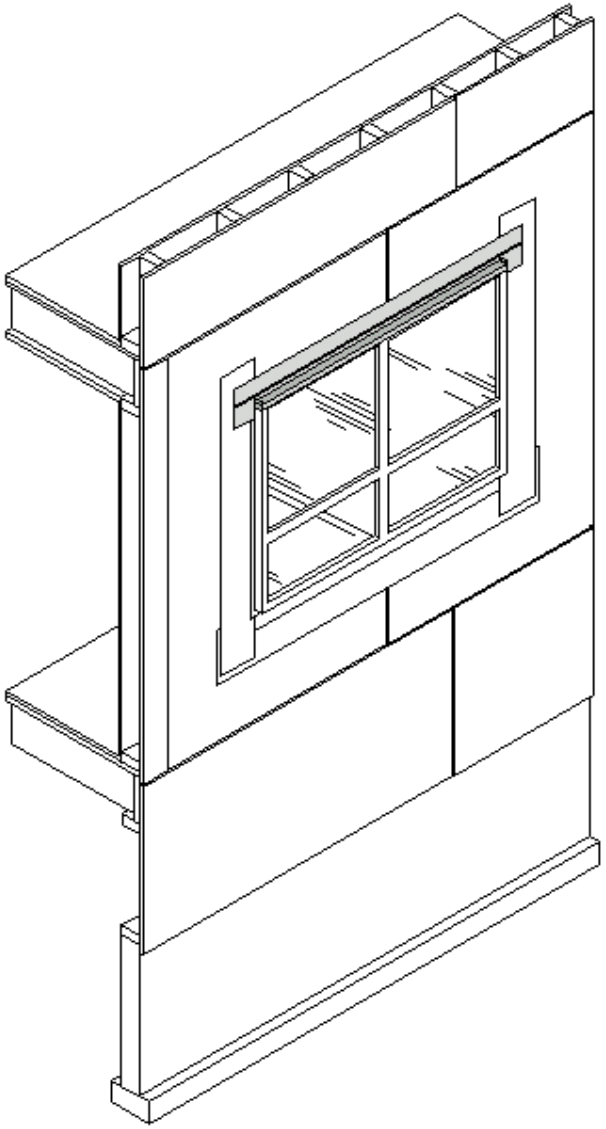

6 Install sheet metal head flashing.

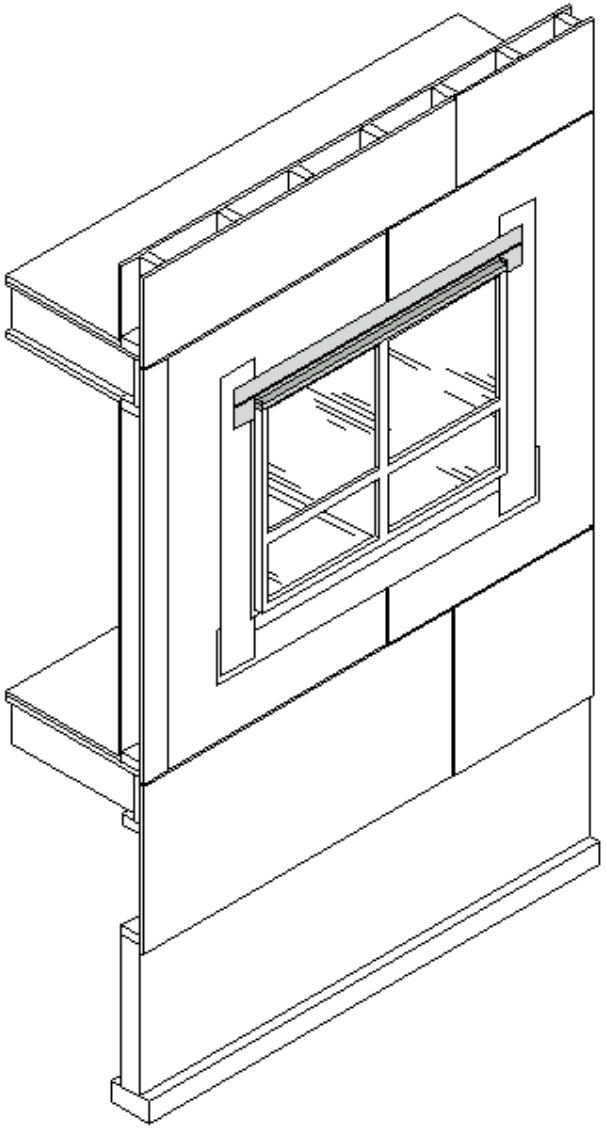

6 Install sheet metal head flashing.

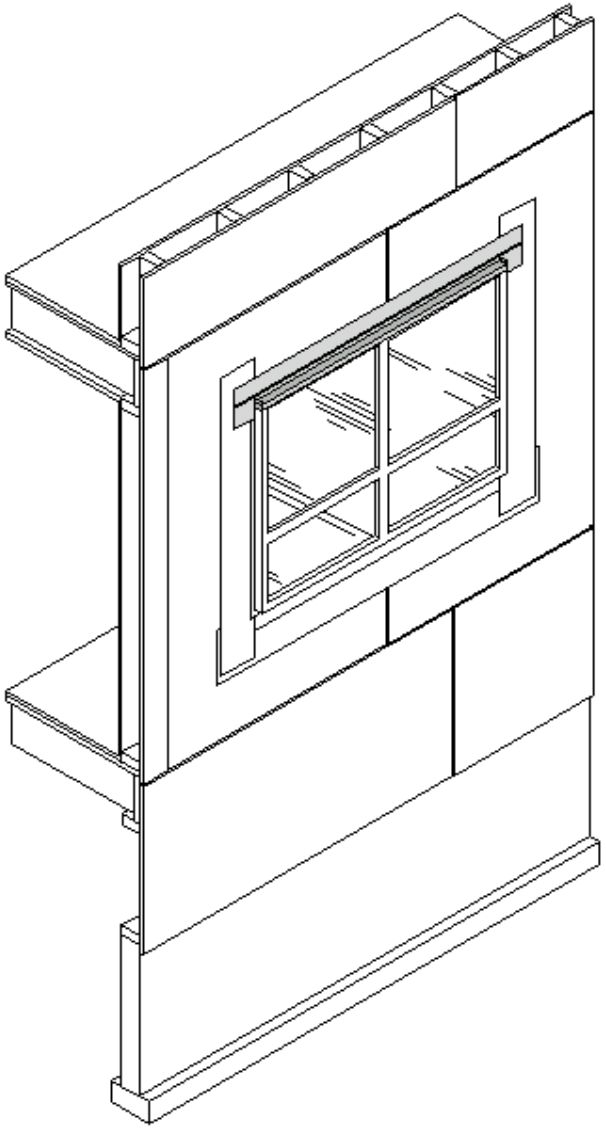

5 Install window.

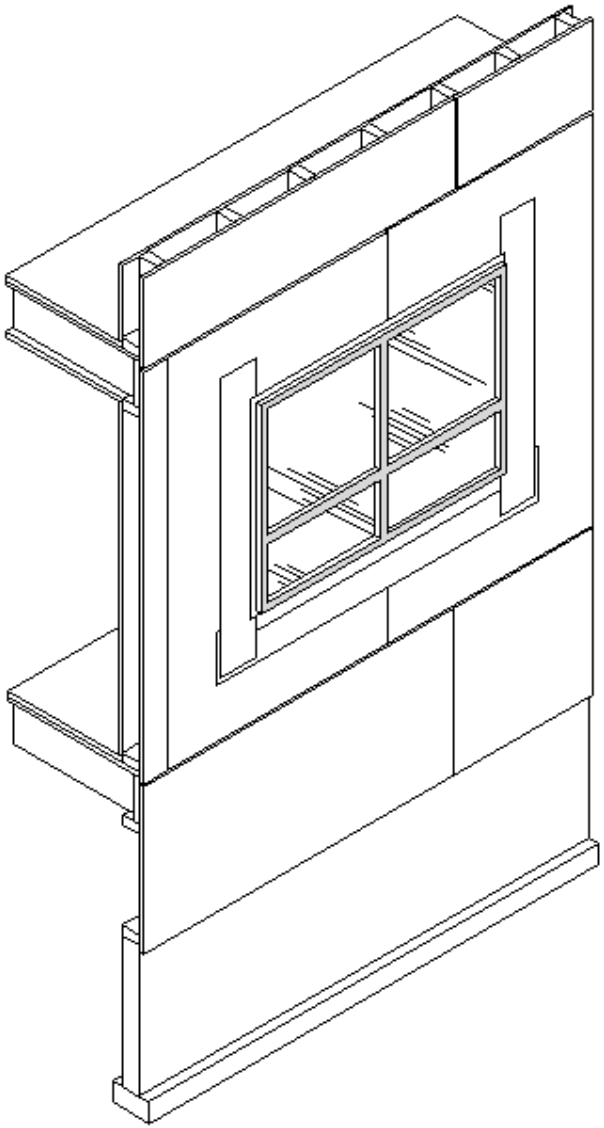

5 Install window.

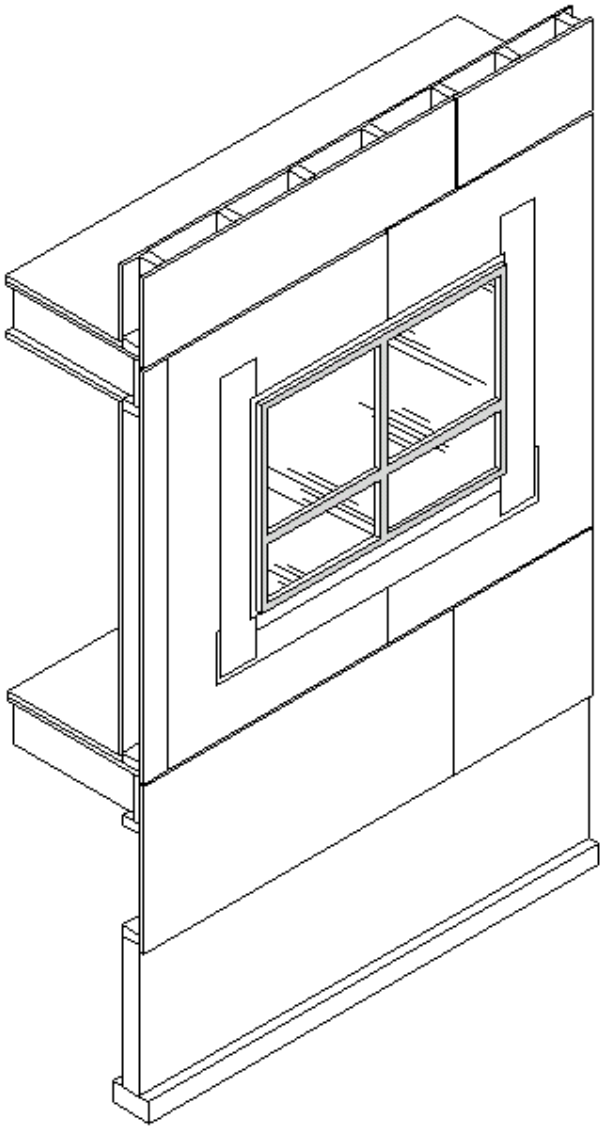

5 **Install window.**

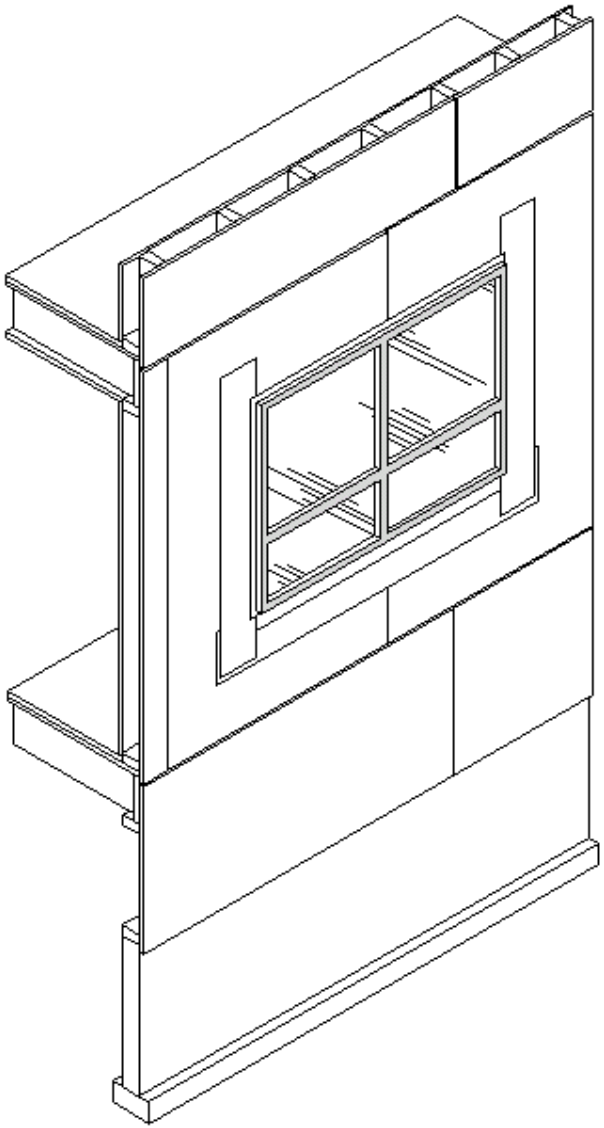

5 **Install window.**

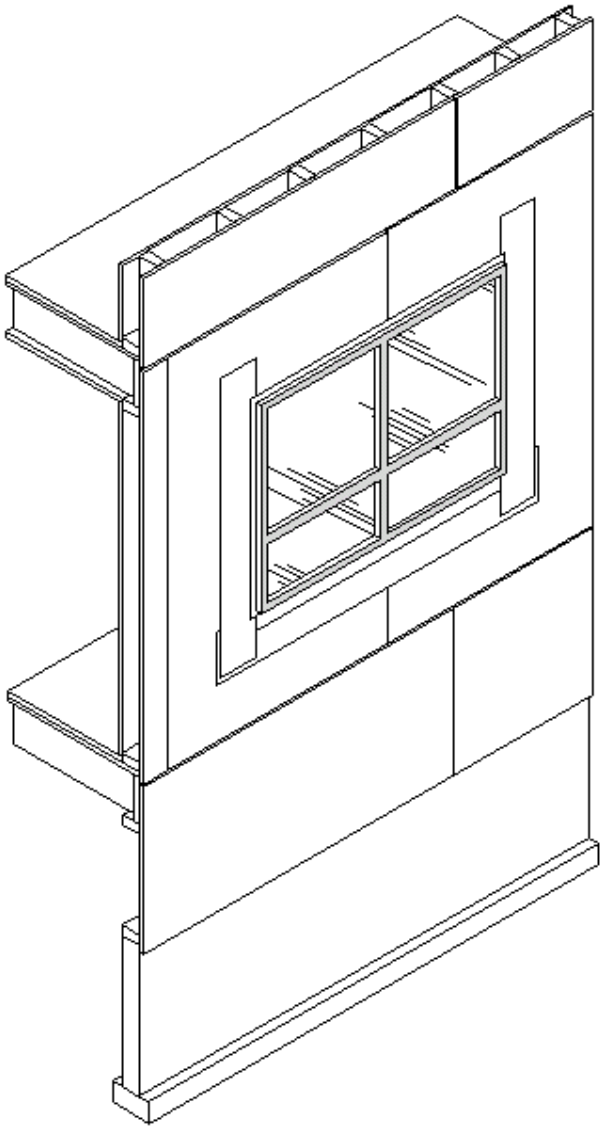

5 Install window.

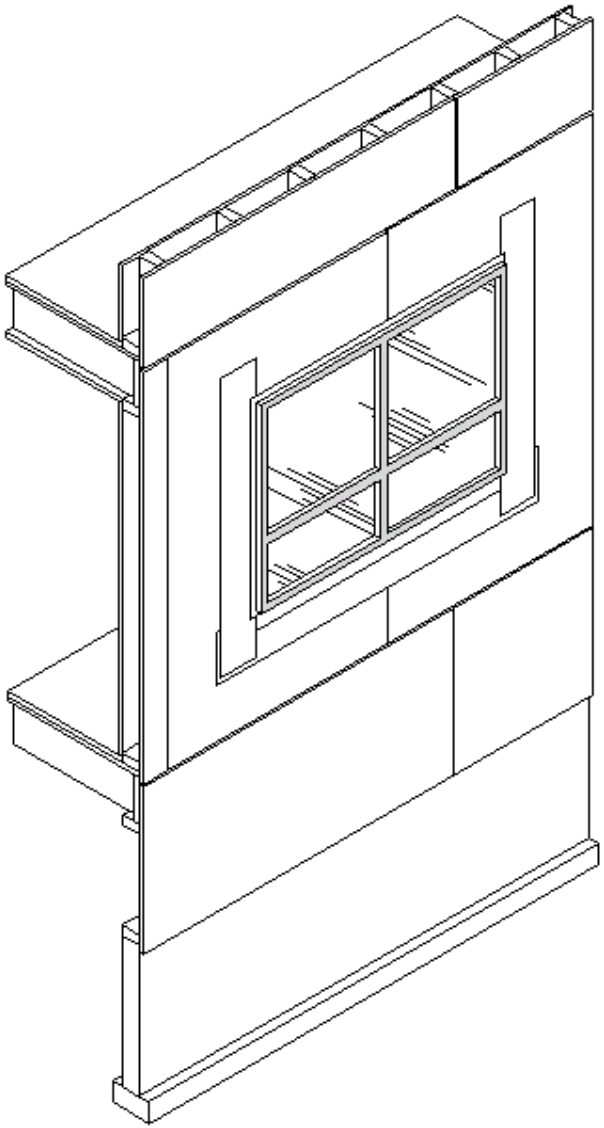

4 **Install shims.**

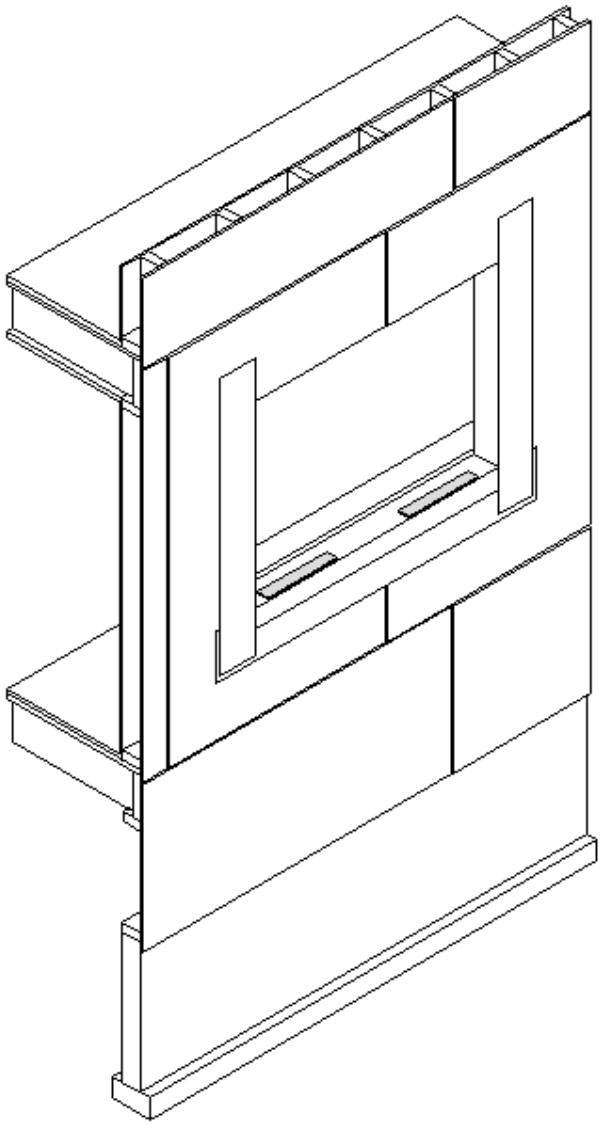

3 Install sheet membrane into window opening.

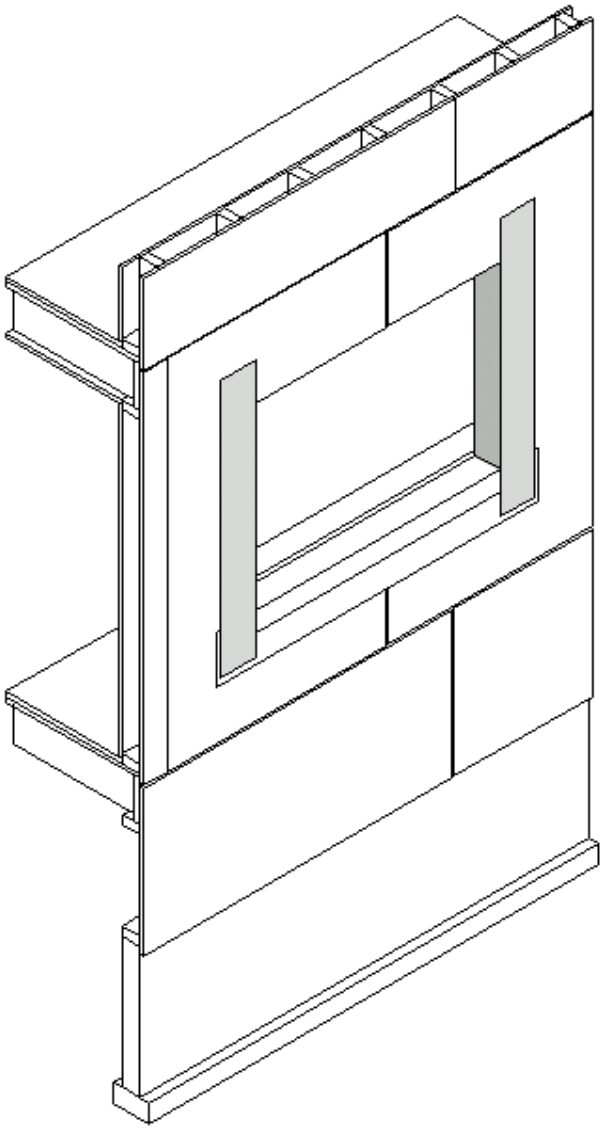

3 **Install sheet membrane into window opening.**

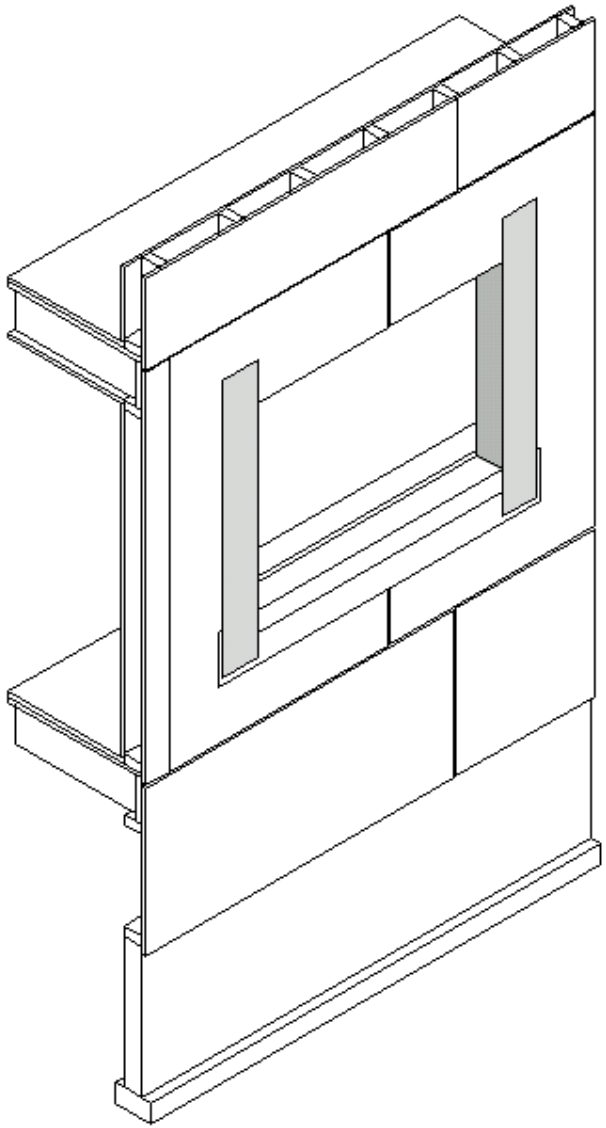

3 **Install sheet membrane into window opening.**

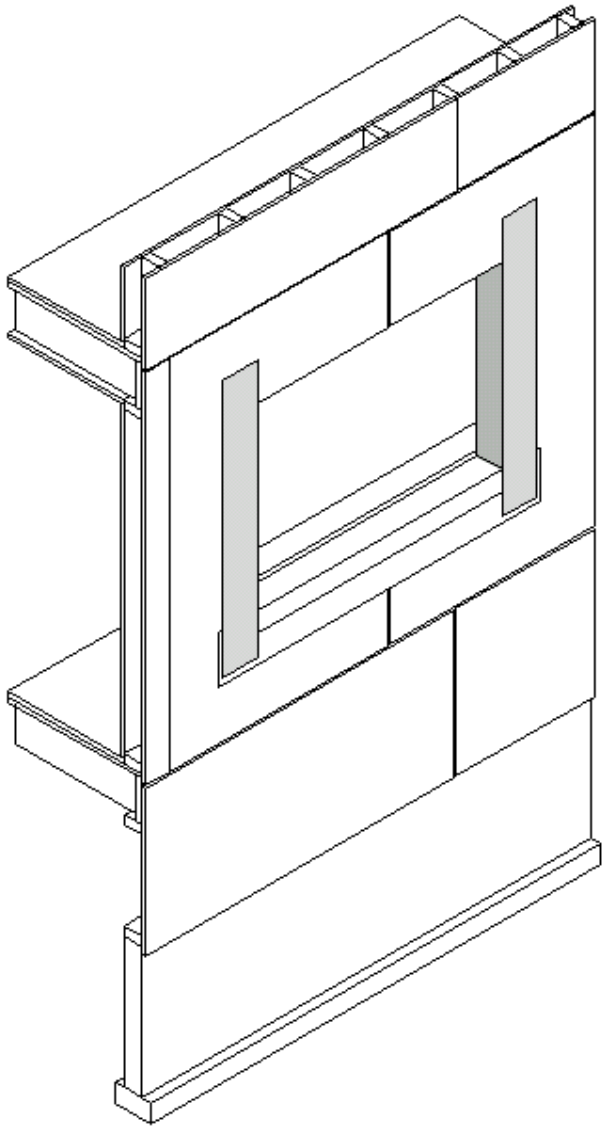

3 **Install sheet membrane into window opening.**

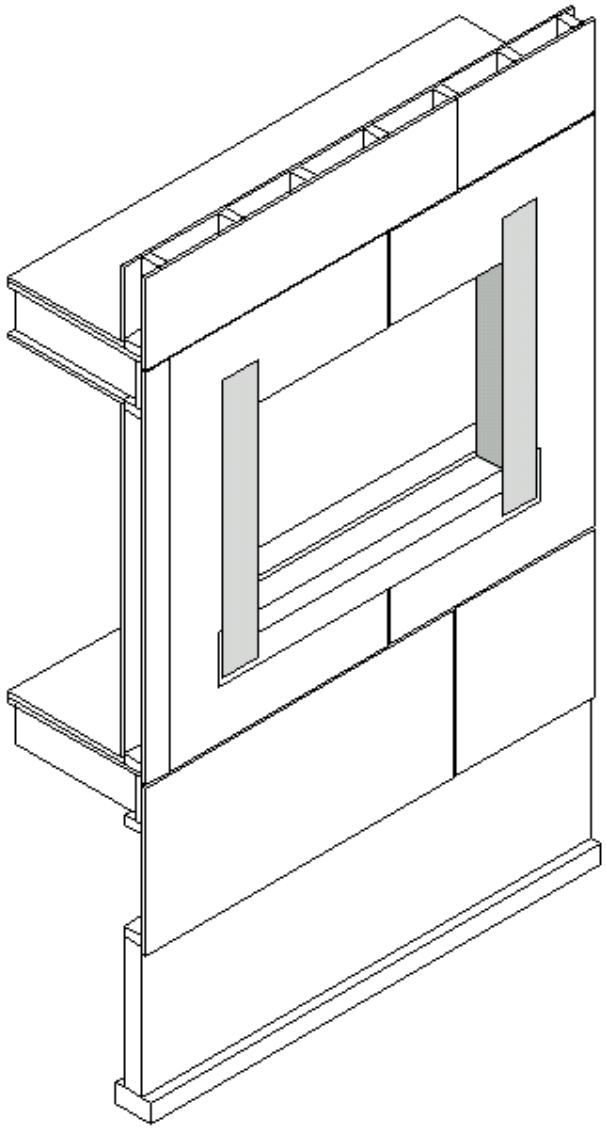

3 **Install sheet membrane into window opening.**

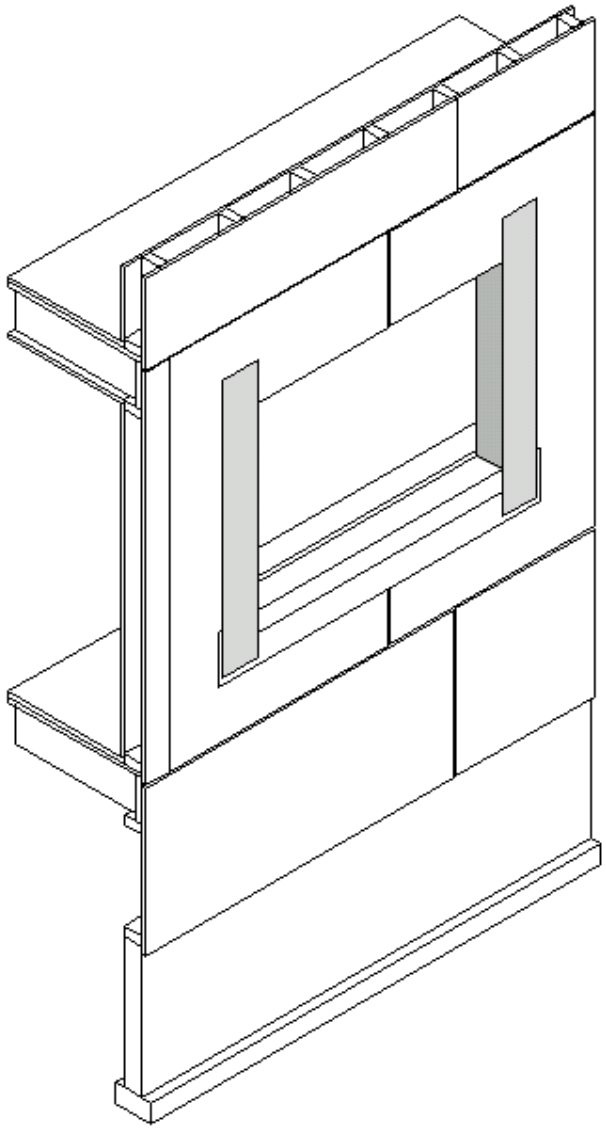

3 **Install sheet membrane into window opening.**

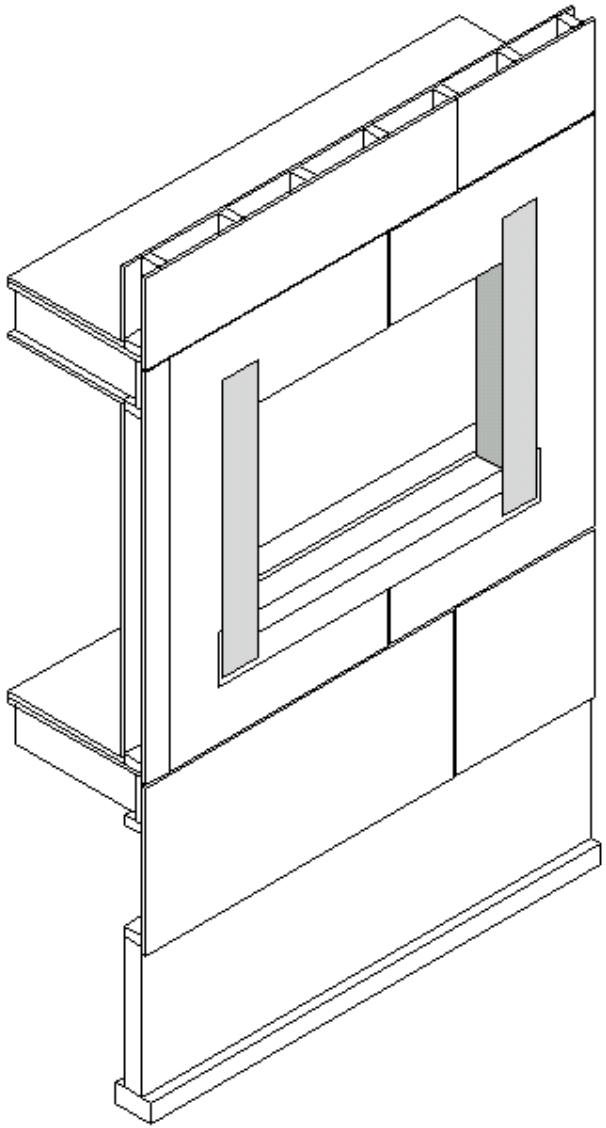

3 **Install sheet membrane into window opening.**

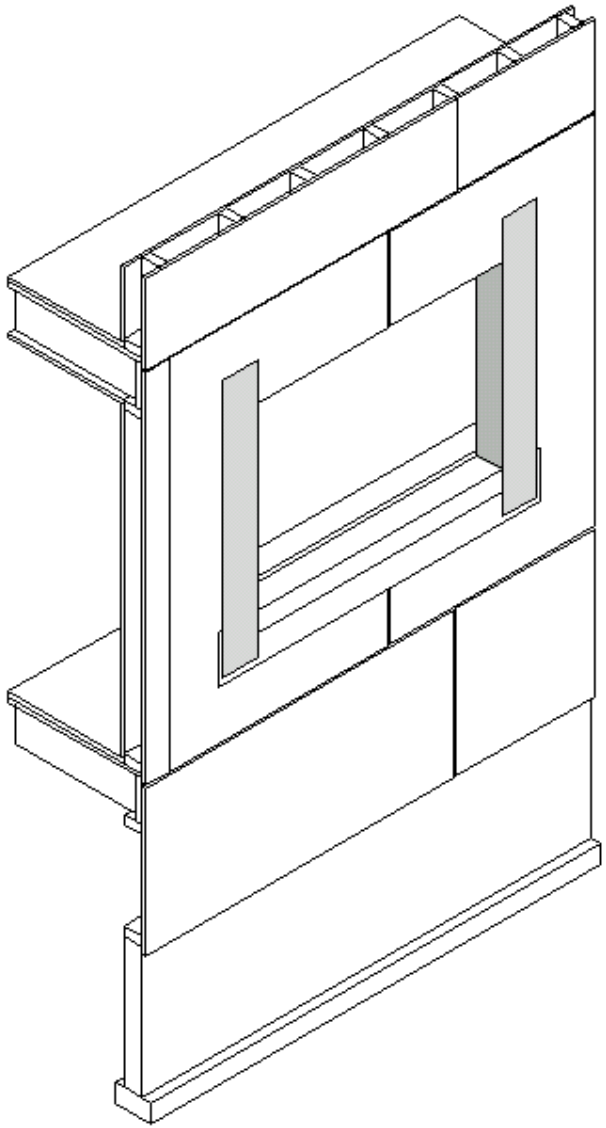

3 **Install sheet membrane into window opening.**

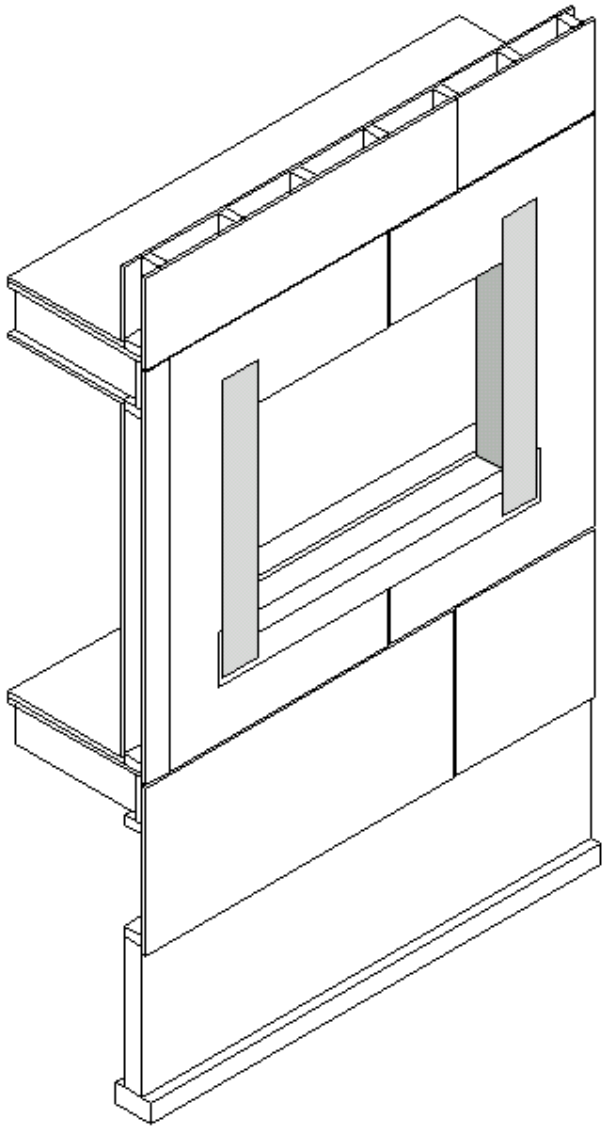

2 **Install sheet metal tray.**

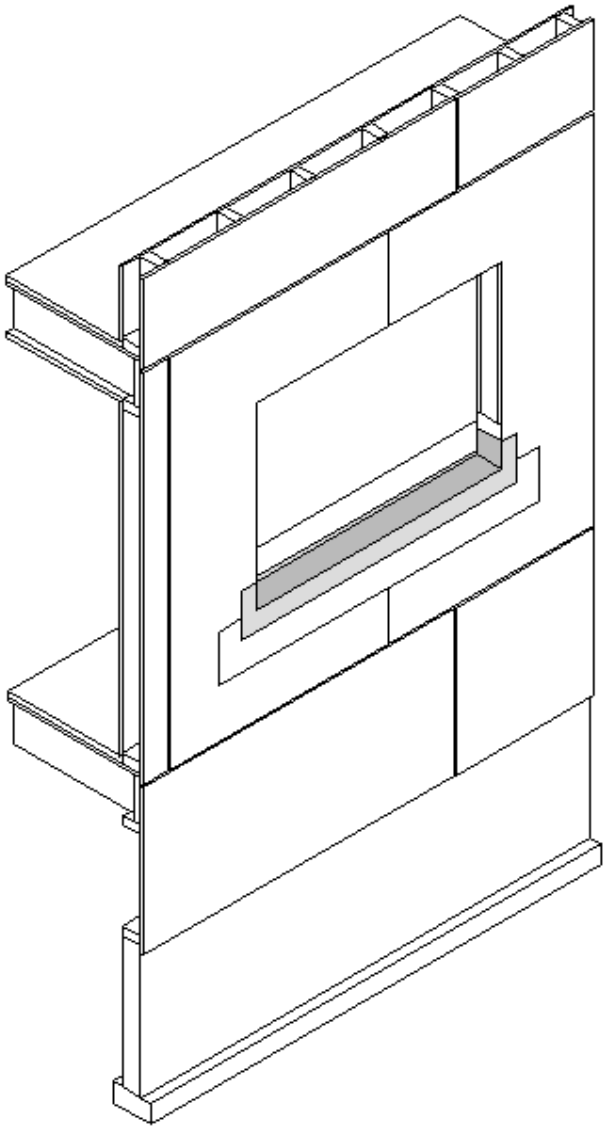

2 **Install sheet metal tray.**

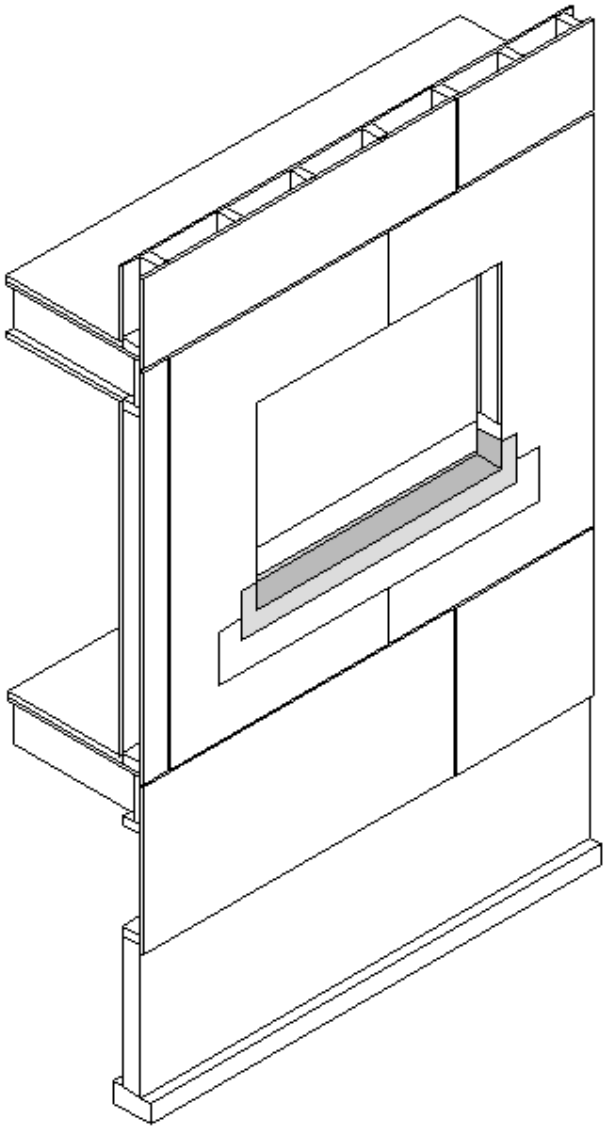

2 **Install sheet metal tray.**

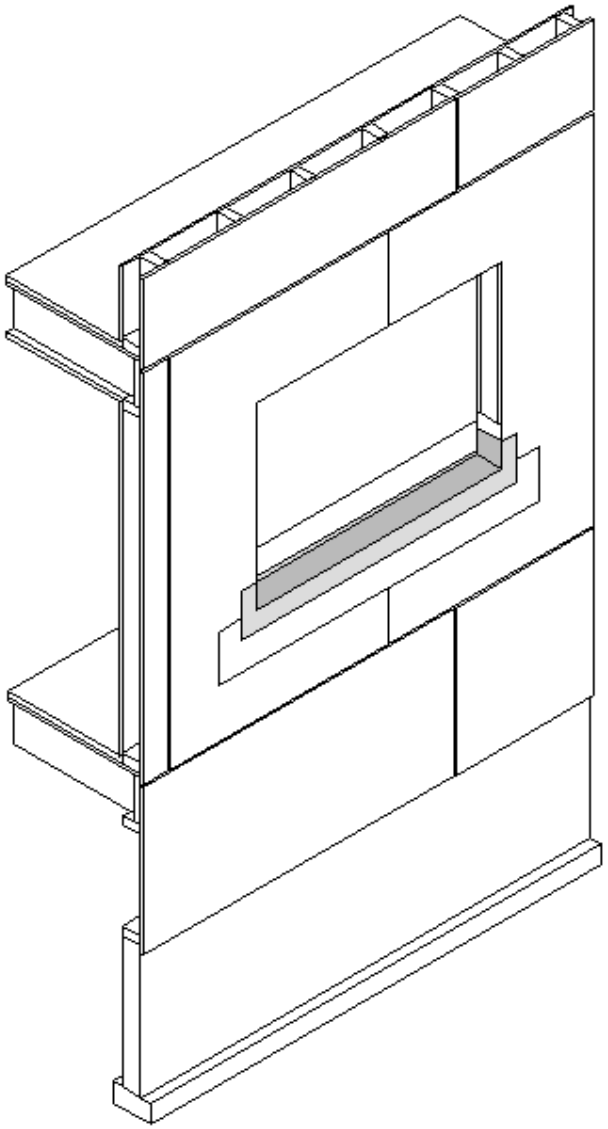

2 **Install sheet metal tray.**

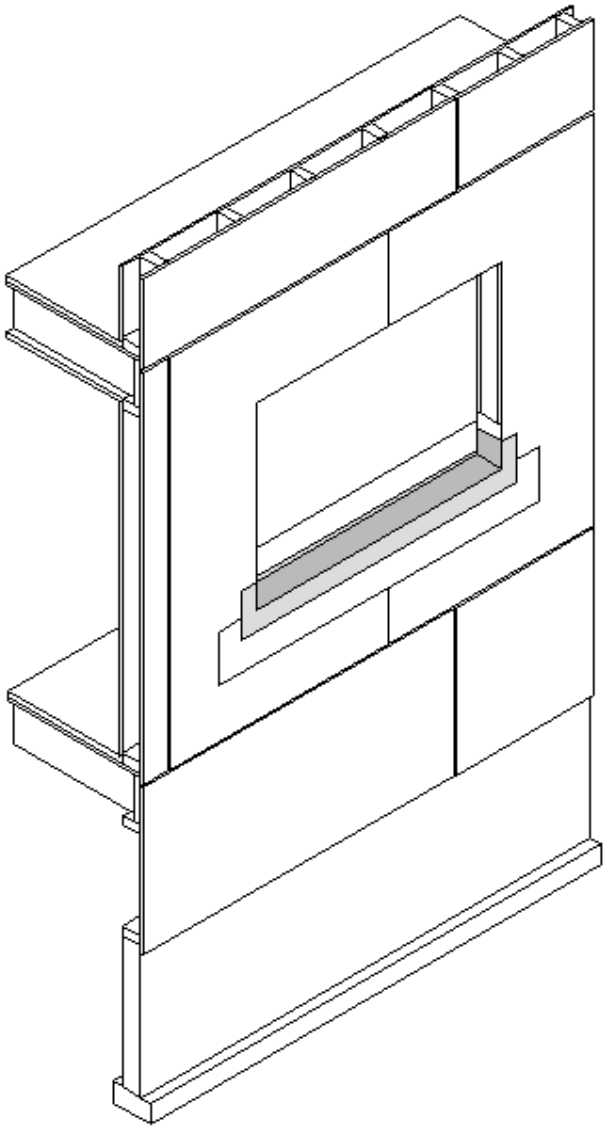

2 **Install sheet metal tray.**

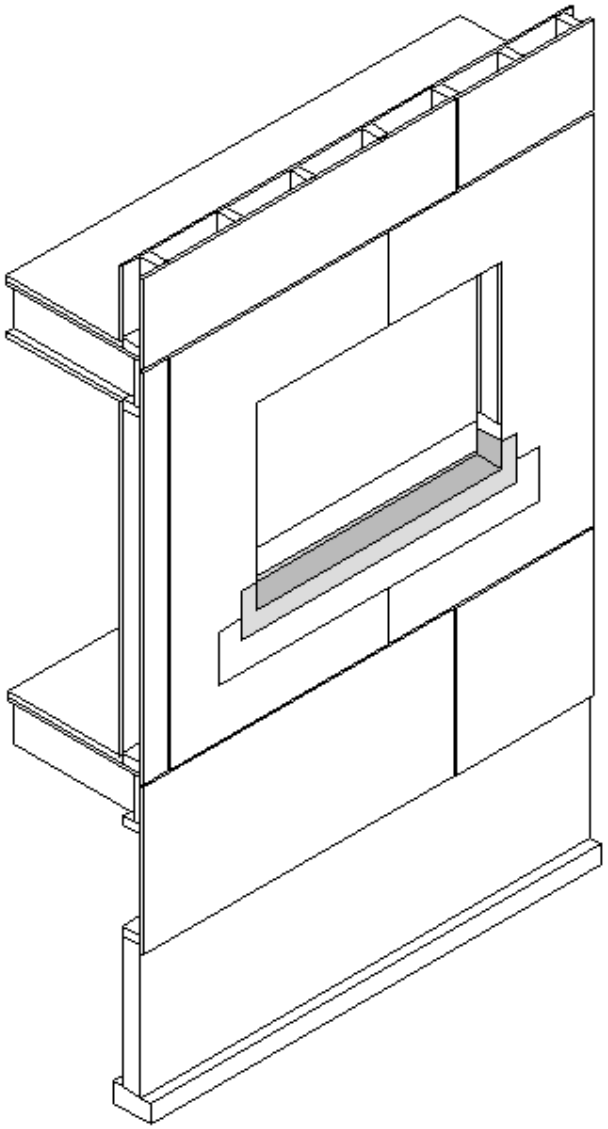

1 **Install sheet membrane into and below window opening.**

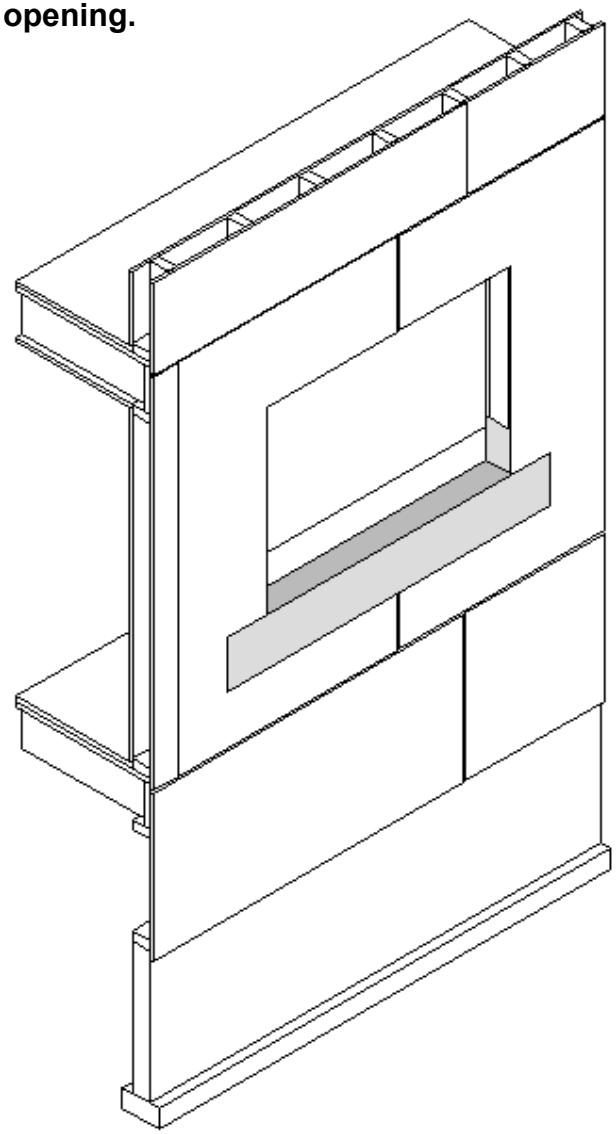

1 **Install sheet membrane into and below window opening.**

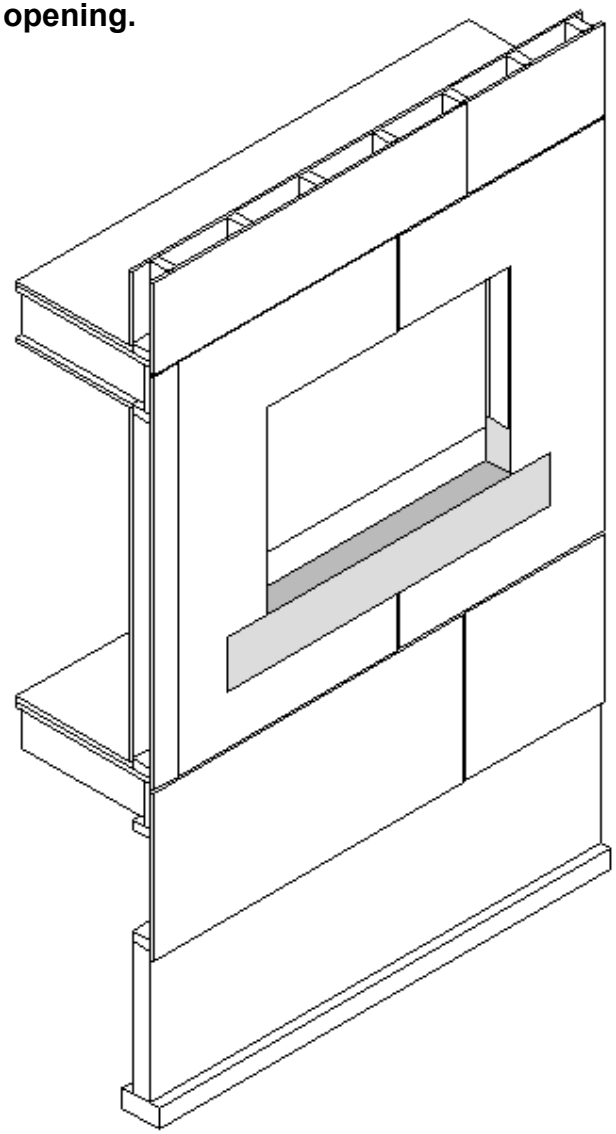

Designation: E 2112 – 07

Standard Practice for
Installation of Exterior Windows, Doors and Skylights[1]

- ✓ ***Difficult to properly install***
- ✓ ***Allows water leakage under typical weather conditions.***
- ✓ ***Leaks air***

Liquid detailing membrane

Challenges with Using ASTM E 2112 in North American Climate Zones

Kevin C. Day

William C. Brown, P.Eng
Member ASHRAE

ABSTRACT

Designing and constructing window-wall interfaces for long service life must include consideration of potential pathways for water ingress and egress; through both the window system and the interfacing cladding(s). ASTM E 2112 prescribes the installation of windows, patio-type doors and skylights as used primarily in residential and light construction commercial buildings. Adopting ASTM E 2112 allows designers to rely solely on windows to resist water penetration, independent of the adjoining wall assembly. However, experience of the authors has demonstrated that this approach has considerable risk.

When mass load-bearing walls, i.e., concrete and masonry, were the norm for buildings, the risk of damage from periodic water penetration at windows (in particular through the framing elements into the sub-sill cavity between the wall and window) was low because the walls had a high tolerance to moisture. In addition, the interior finishes, such as the traditional lime-based wall and ceiling plasters used widely in the 19th and early 20th centuries, were more robust to periodic wetting. Design practices have evolved to include non-load bearing walls with less moisture resistant structural systems, e.g., wood and steel studs, and paper-faced gypsum sheathings, combined with windows that attempt to manage water by intercepting it at the face of the assembly, and draining at the operable interface. Notwithstanding the advances in the performance of sealants and membrane materials, reliance upon face sealed systems has a higher risk of water penetration because of the inherent aging of the materials and loads imposed, thus reducing the overall resistance to water penetration and consequent damage.

This paper presents an overview of the design considerations for window installation relative to climate zones across North America. It also presents a series of conceptual details that focus on the control of water ingress from rain, air leakage, and vapor pressure across the window-wall interface.

INTRODUCTION

The building construction industry in North America has been challenged since the early 1980's to address the large number of malfunctioning building envelopes. Many consumers have been inconvenienced and financially distressed by the fiasco of water penetration problems associated with windows. Allegations of damage and mold-related problems have been widespread; the assessment of the situation has been pervasive in symposia and academic forums over the last two decades.

The list of technical papers and articles (too long to cite here) which delineate problems between windows and walls typically highlight the interface of the sheathing membrane with the concealed portion of the window framing. However, there has been a significant difference in the approach to making a water resistant connection. In particular, the degree to which windows are assumed to be water-tight, both by their construction and by their installation, and how water penetration is defined when it enters the wall assembly (or penetrates to the occupied interior space). Although windows are referenced throughout this paper as the generic fenestration element for the purpose of discussion, sliding glass (patio) and conventional doors must adopt the same principles regarding the window-wall interface details.

Kevin C. Day *is a building science specialist for Halsall Associates Ltd., Richmond Hill, ON.* ***William C. Brown*** *is a senior building scientist specialist, Morrison Hershfield Ltd., Ottawa, ON.*

Liquid detailing membrane

“Challenges with Using ASTM E 2112 in North American Climate Zones”

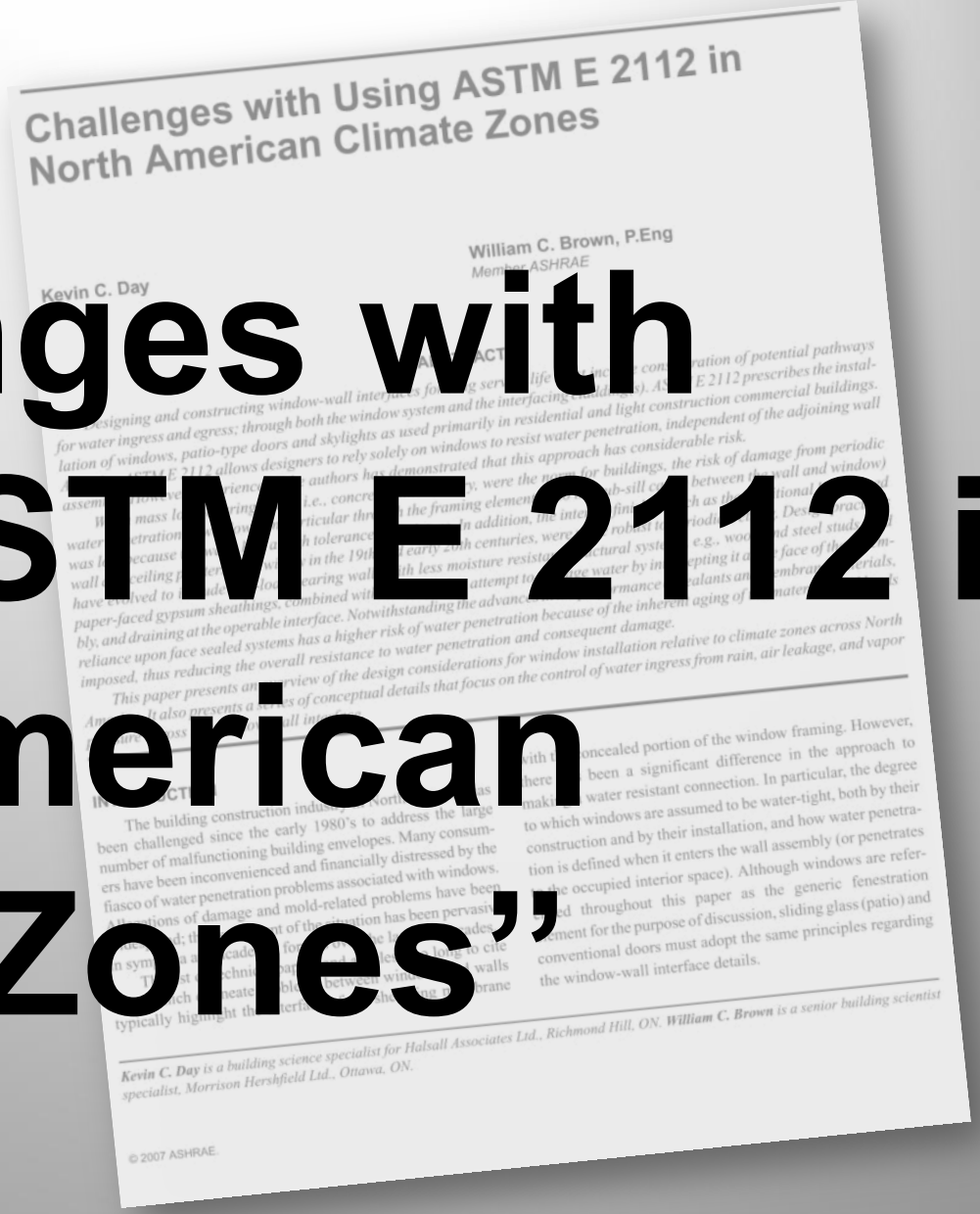

Challenges with Using ASTM E 2112 in North American Climate Zones

Kevin C. Day

William C. Brown, P.Eng
Member ASHRAE

© 2007 ASHRAE.

Liquid detailing membrane

“Who are those guys?”

Butch Cassidy & The Sundance Kid, 1969

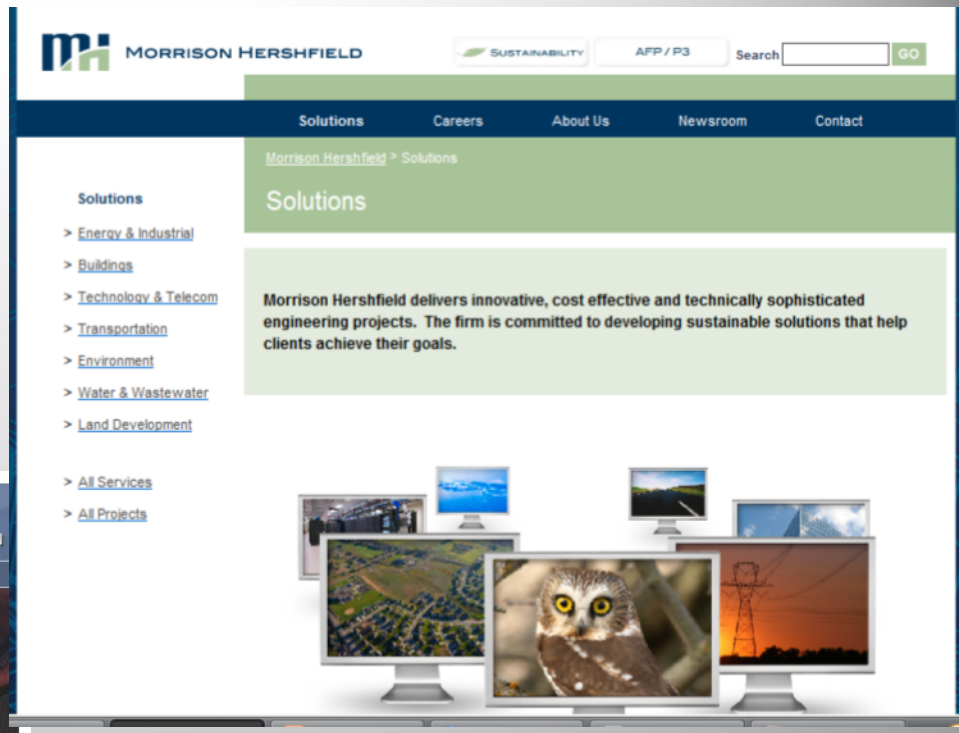

“What Proceedings?”

Eleventh International Conference on Thermal Performance of Exterior Building Envelopes

“Sponsored by?”

Building Enclosure Integration Committee
of the
Building Enclosure Technology & Environmental Council (BETEC)
of the
National Institute of Building Sciences
and
ASHRAE

“Notwithstanding the advances in the performance of sealants and membrane materials,

reliance upon *face sealed systems* has a higher risk of water penetration because of the inherent aging of the materials and loads imposed,

thus reducing the overall resistance to water penetration and consequent damage.”

“CONCLUSION

...the combination of wood- or steel-framed construction with **windows that may leak** at some point during their life cycle leads the authors to conclude that only the hot and dry hygrothermal zone may be tolerant of periodic wetting and **secondary protection of the window opening is required** in all other hygrothermal zones.”

Revision of ASTM E 2112

- Pan Flashing Systems
- This practice recommends that pan flashings be used under all windows and doors
- Pan Flashing Seal Discontinuity –
  - to permit drainage from the sill pan to the exterior.

Revision of ASTM E 2112

Types of pan flashing materials

- metal
- plastic
- composites
- self-adhered

Common pitfalls of typical window installations

Metal pan flashing

- Corners must be welded. Sealant in corners not long-term solution.
- Fasteners penetrate pan. Blind seal problematic.
- Window rough openings must accommodate the thickness of metal pan -- including sealant application.

Metal pan flashing (con’t)

- $ COST $ / custom fabrication
- Requires high skill level
- "5.16.8 Pan Flashings as Thermal Bridges" [Don't use metal if it ever gets cold where you are.]

  -- Causes condensation on the interior glass

Common pitfalls of typical window installations

Self-adhered membrane pan flashing

- Folds in corners (“tents”) increases thickness and interferes with window installation leads to tearing during window install
- Sometimes removed altogether
- “Bridges” at overlaps creates water path
- Vapor barriers prevent drying

Window Wrap with Self-Adhered Sill-Pan Flashing, Window and 2 Layers of Building Paper Installation

Peel-n-Stick

Fold Lines

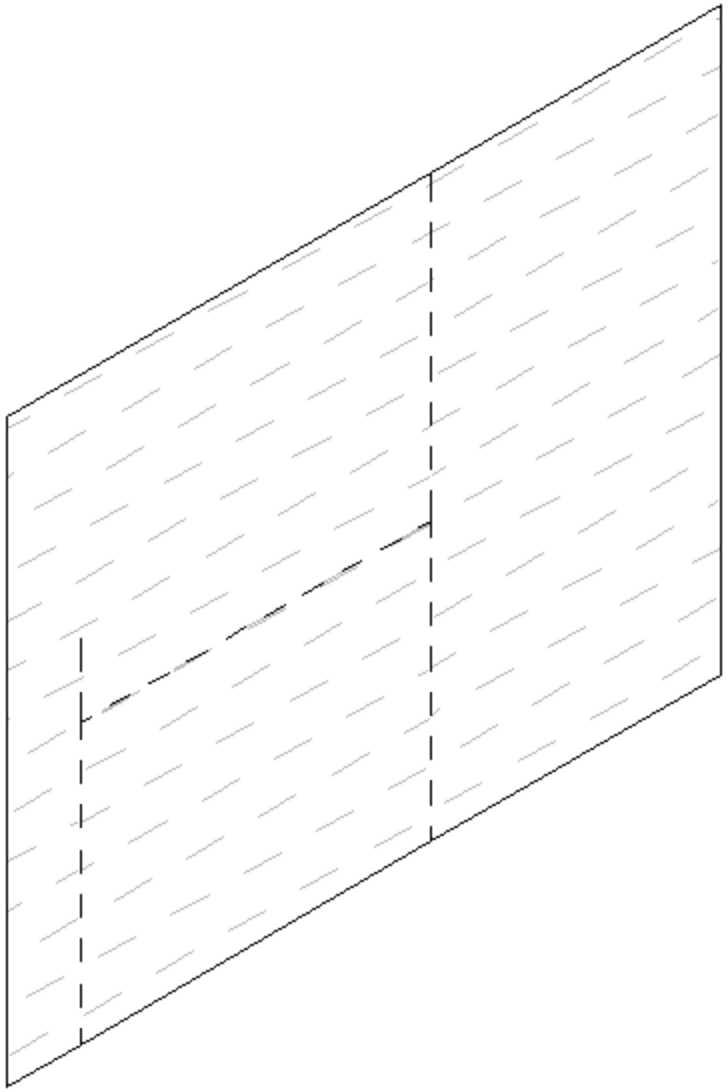

Peel-n-Stick

Fold Lines

Cut

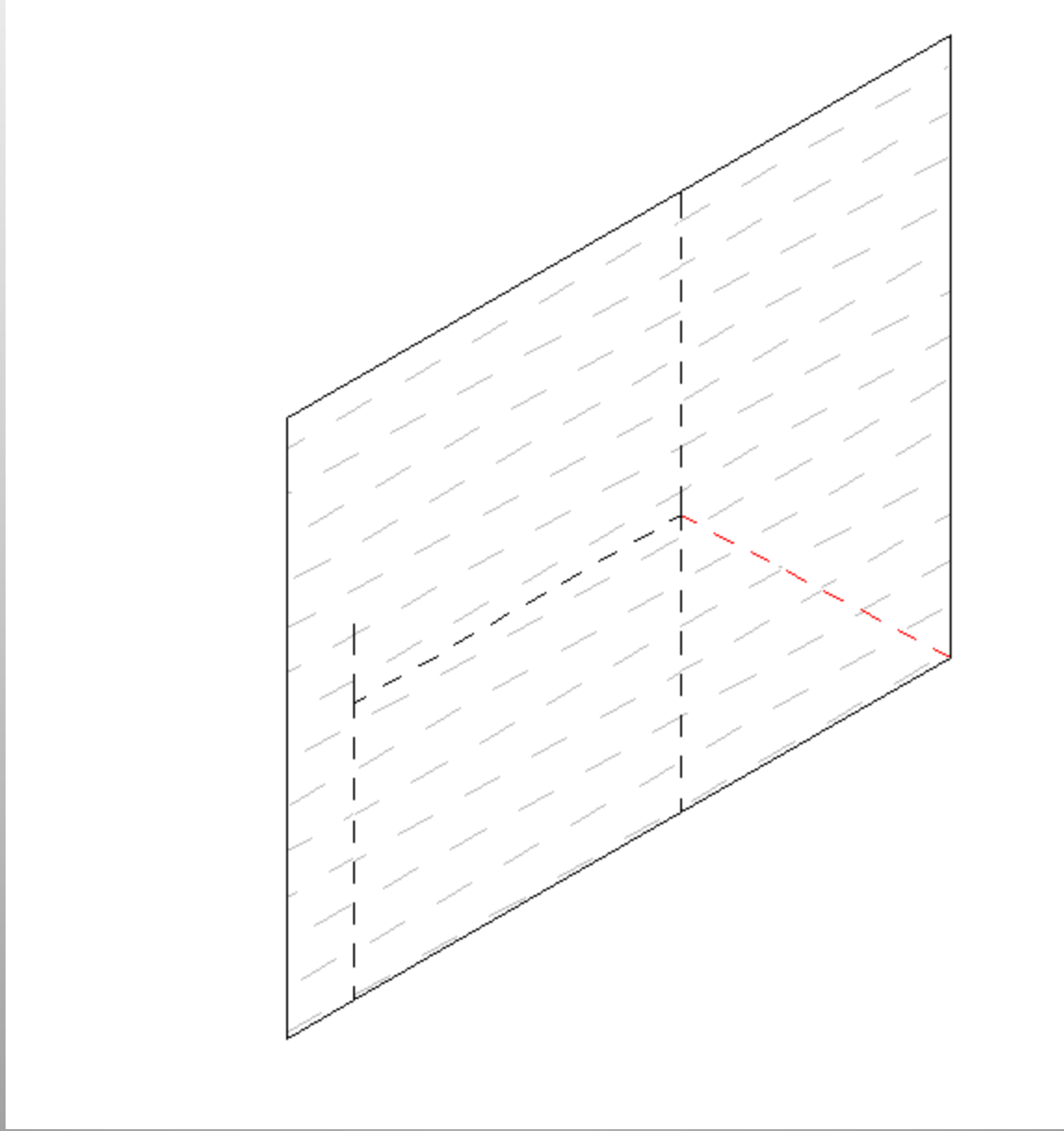

Liquid detailing membrane

Peel-n-Stick

Fold Lines

Cut

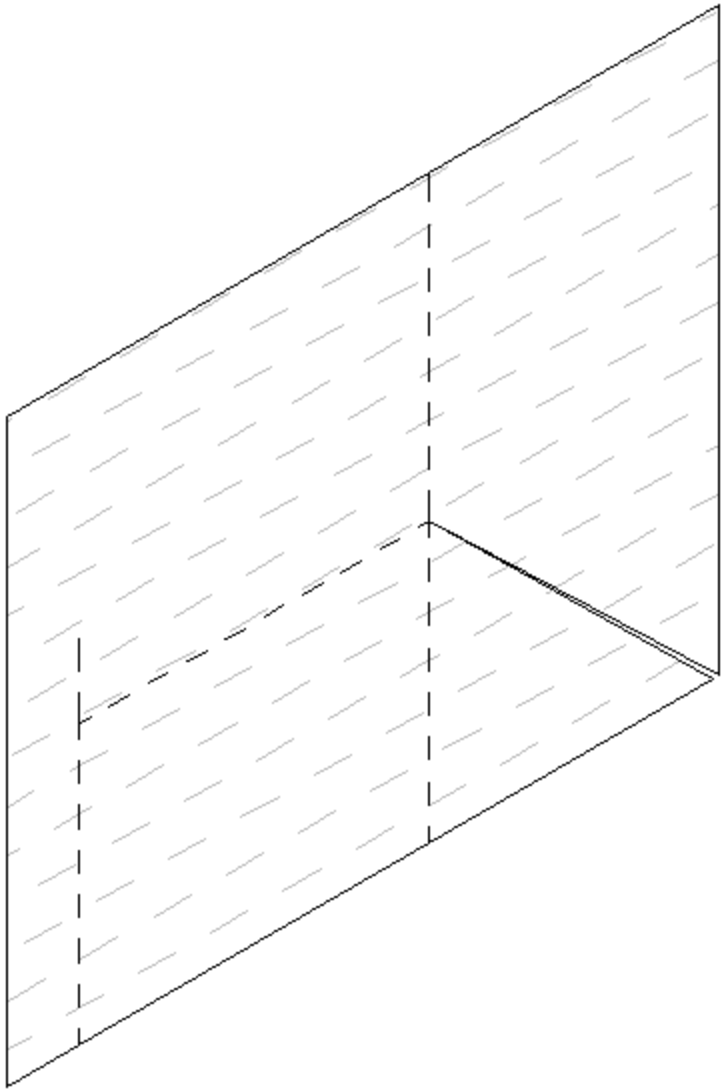

Peel-n-Stick

Fold Lines

Cut

Cut

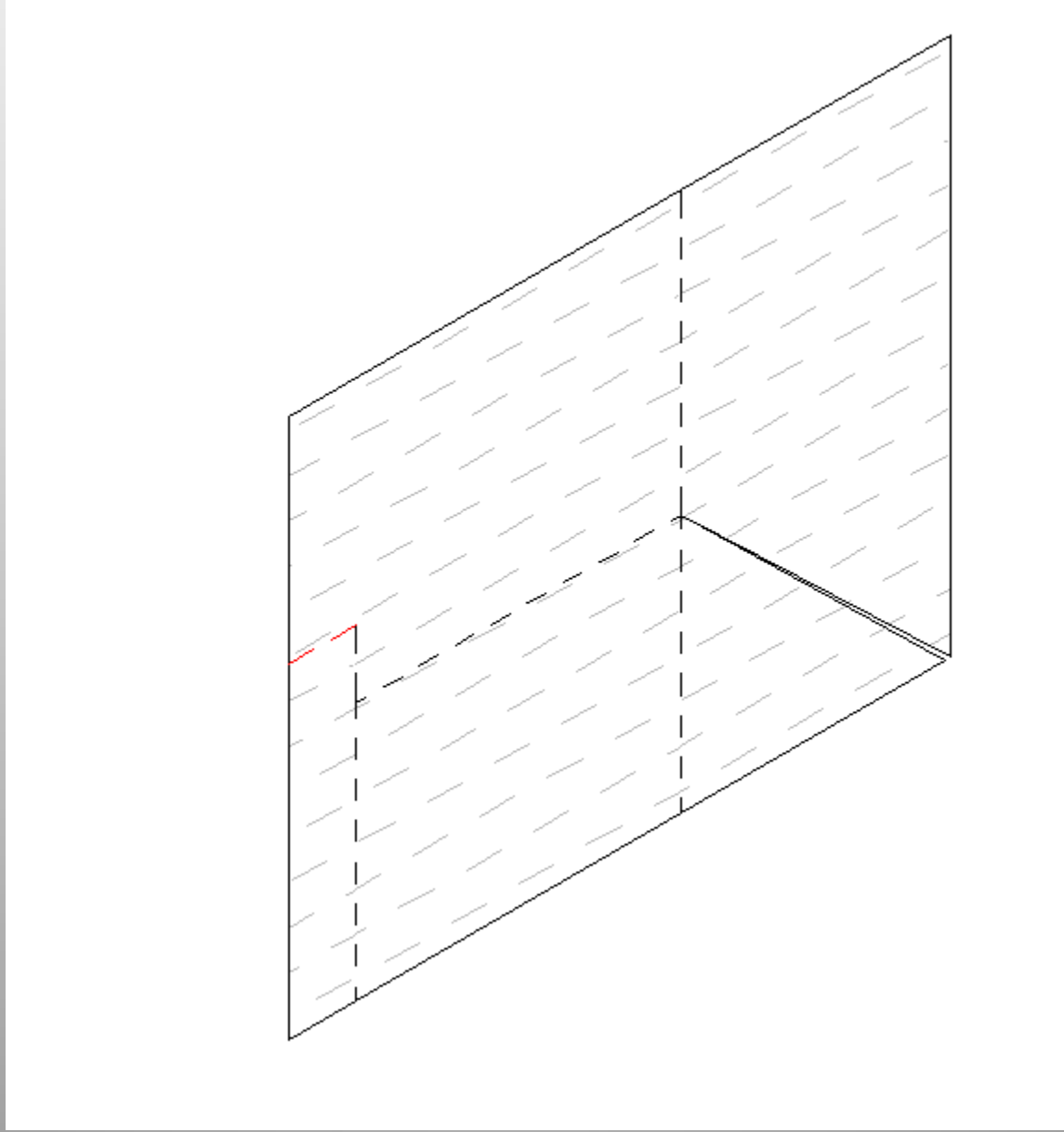

Peel-n-Stick

Fold Lines

Cut

Cut

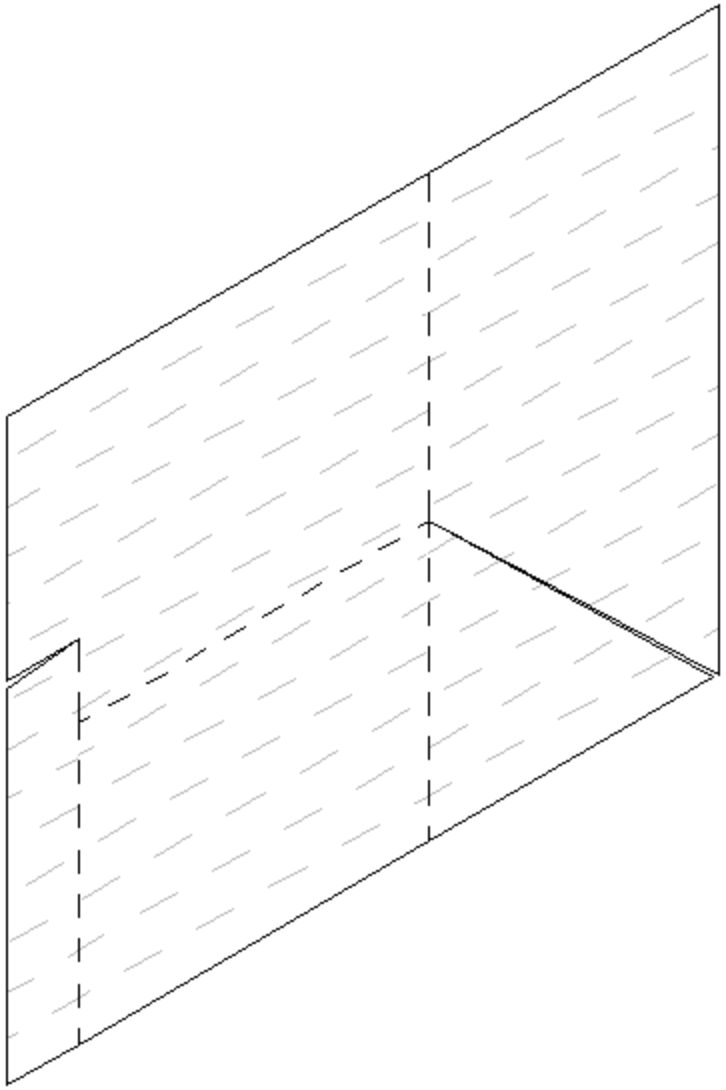

Peel-n-Stick

Fold Lines

Cut

Cut

Cut

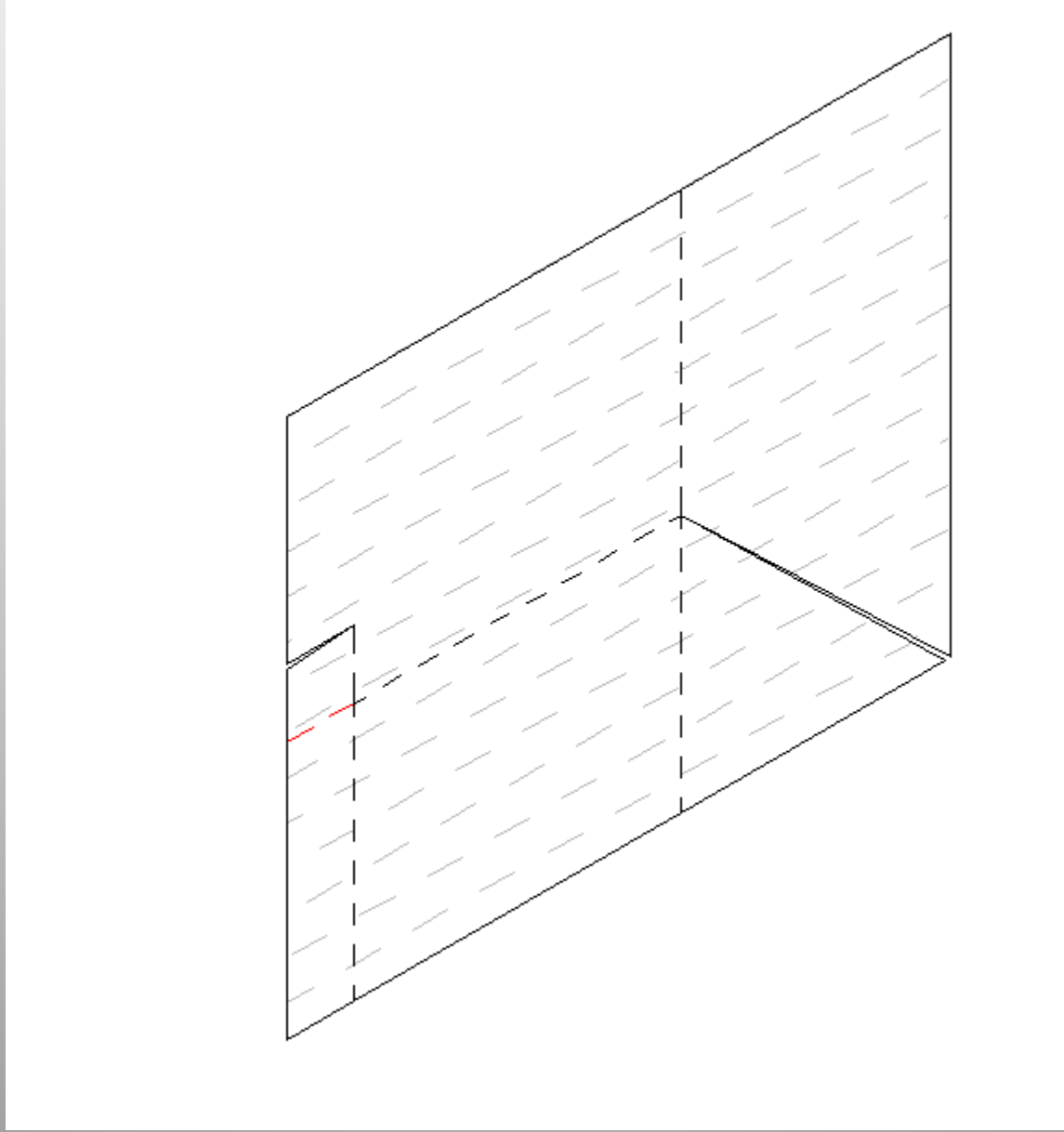

Liquid detailing membrane

Peel-n-Stick

Fold Lines

Cut

Cut

Cut

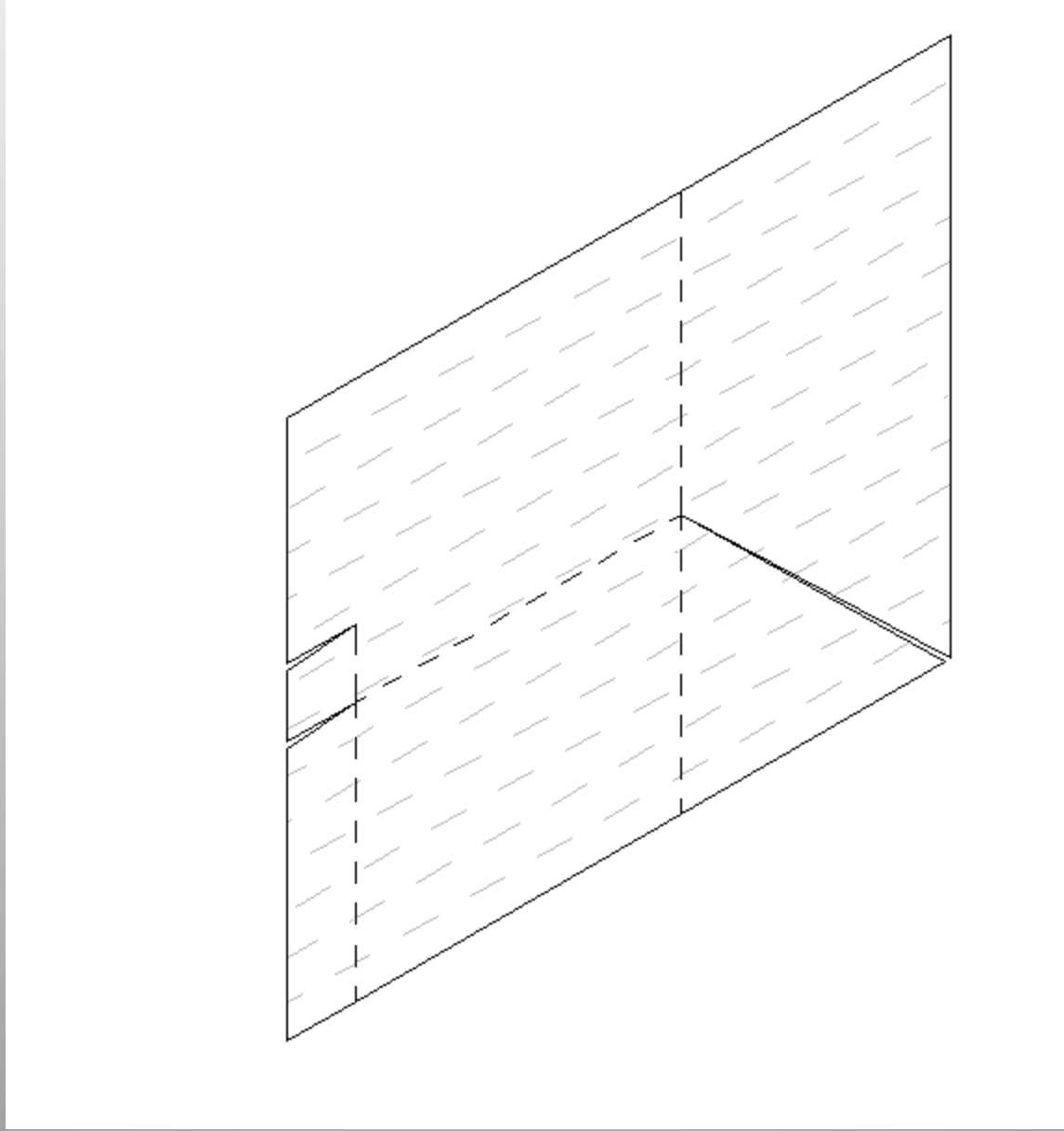

Peel-n-Stick

Fold Lines

Cut

Cut

Cut

Fold

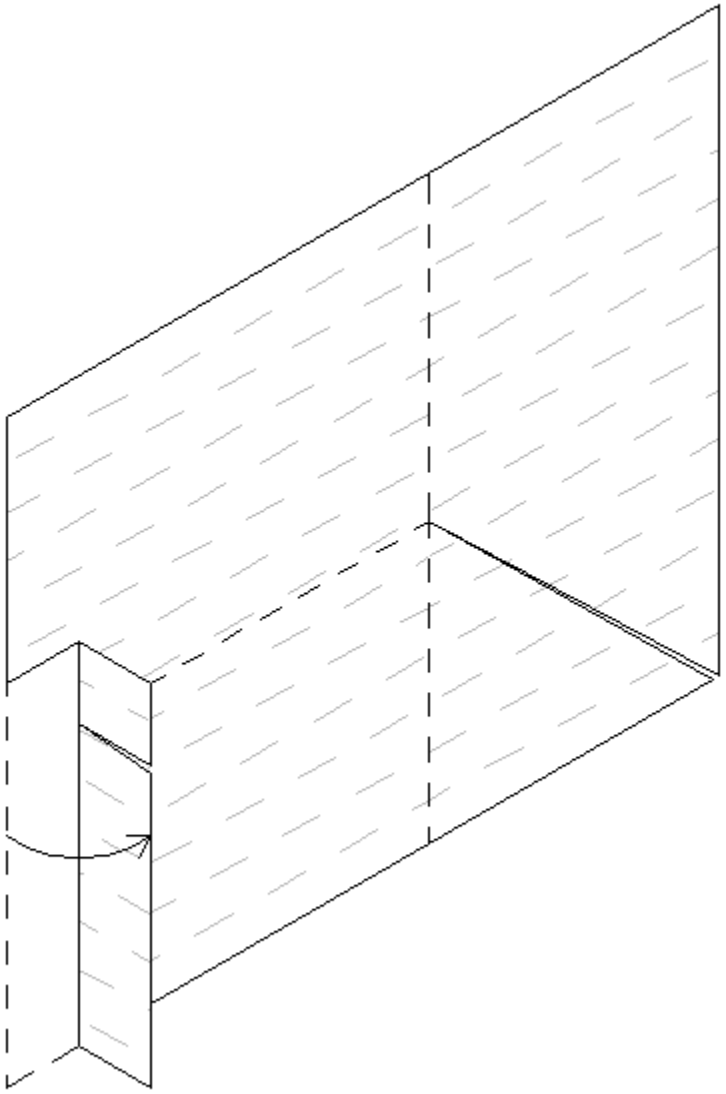

Peel-n-Stick

Fold Lines

Cut

Cut

Cut

Fold

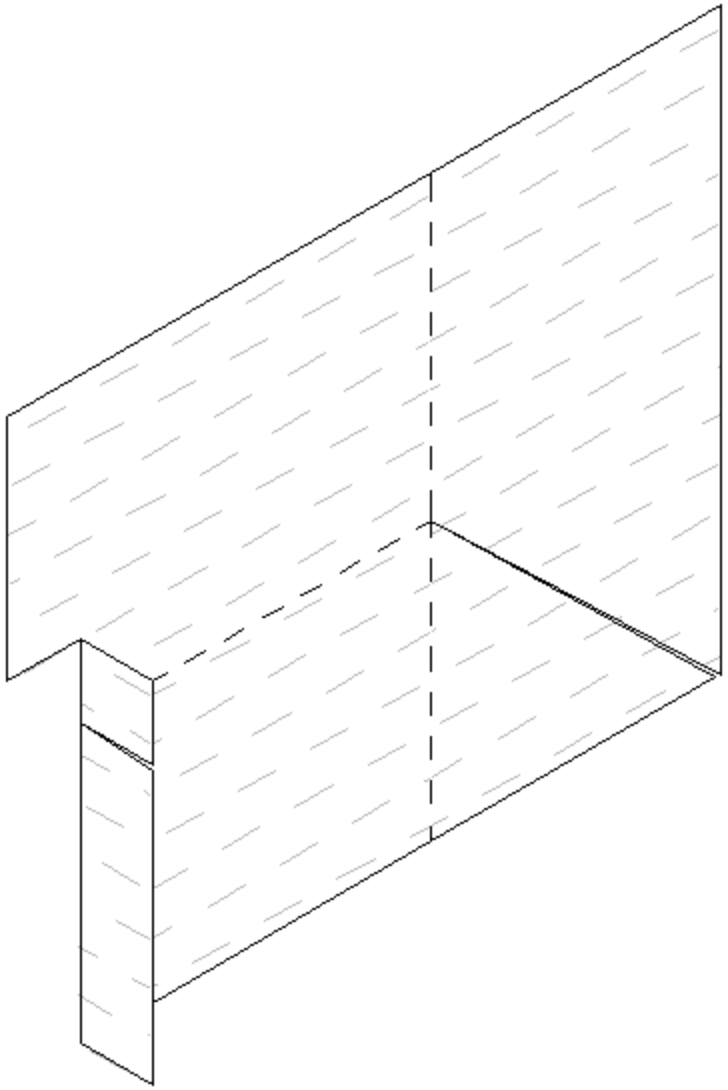

Peel-n-Stick

Fold Lines

Cut

Cut

Cut

Fold

Fold

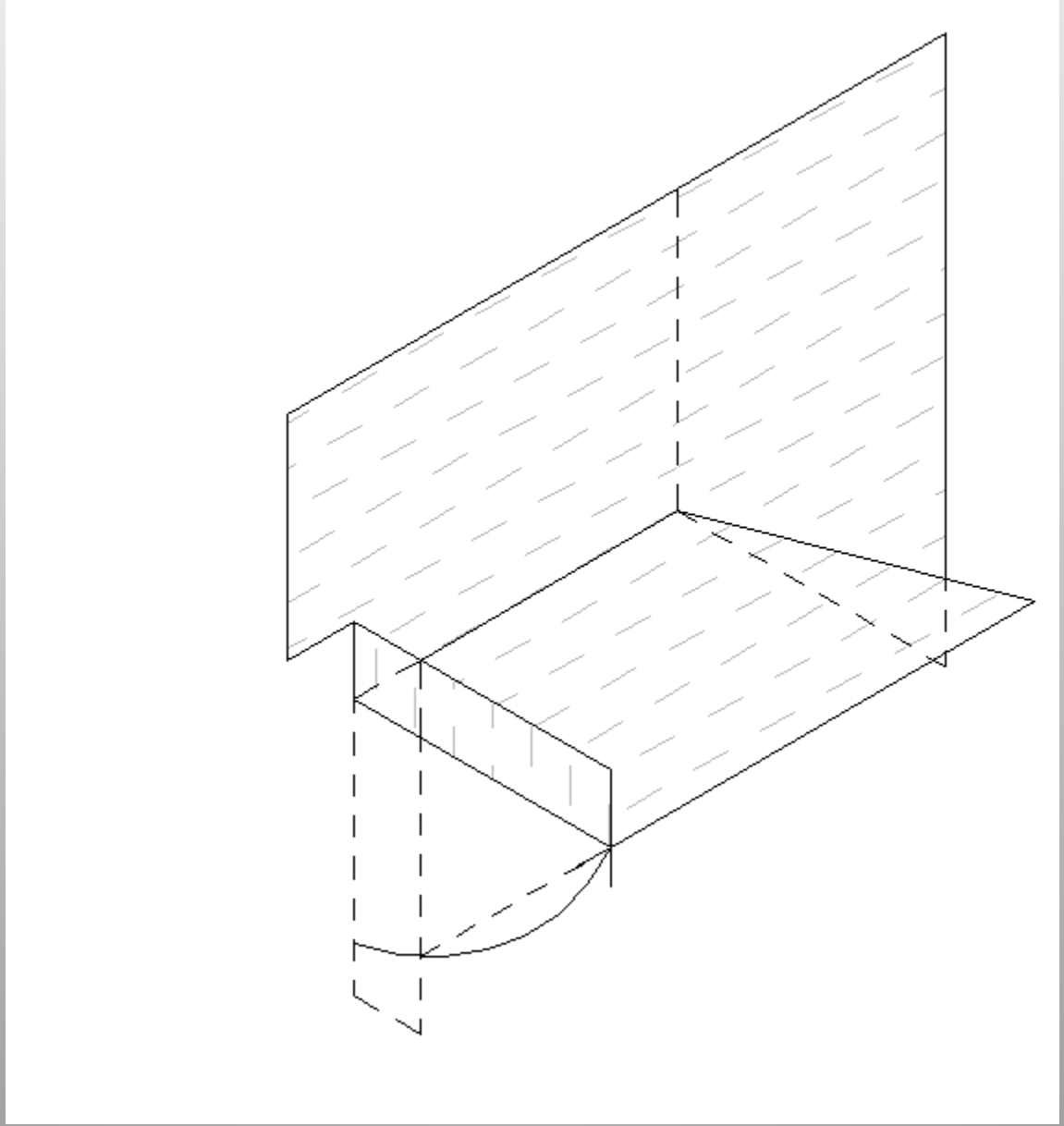

Peel-n-Stick

Fold Lines

Cut

Cut

Cut

Fold

Fold

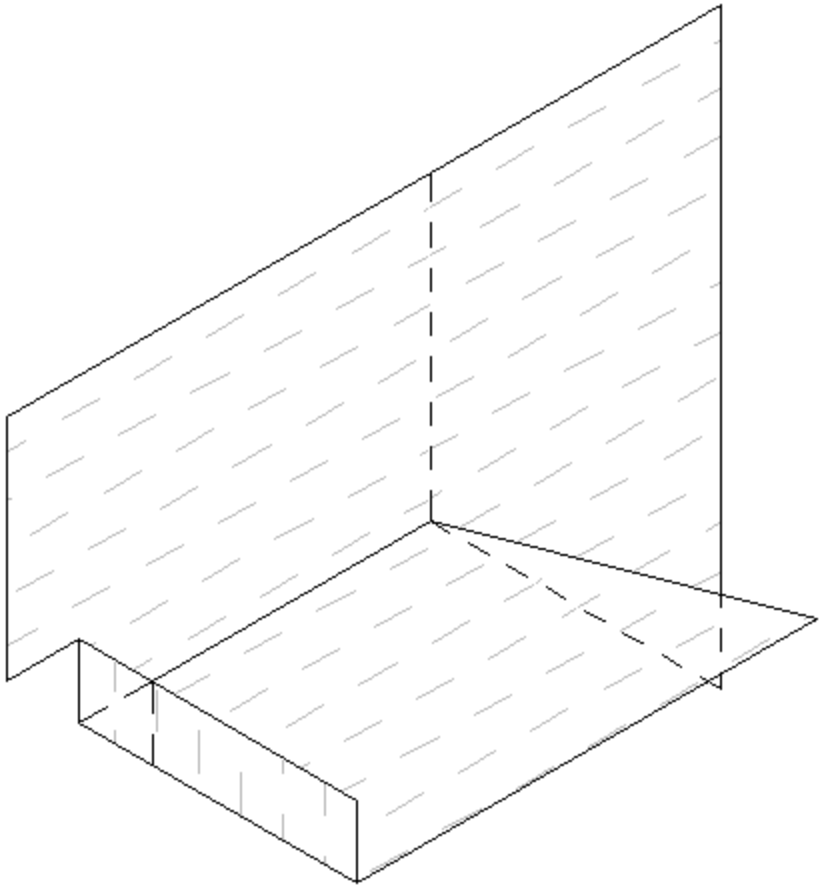

Peel-n-Stick

Fold Lines

Cut

Cut

Cut

Fold

Fold

Fold

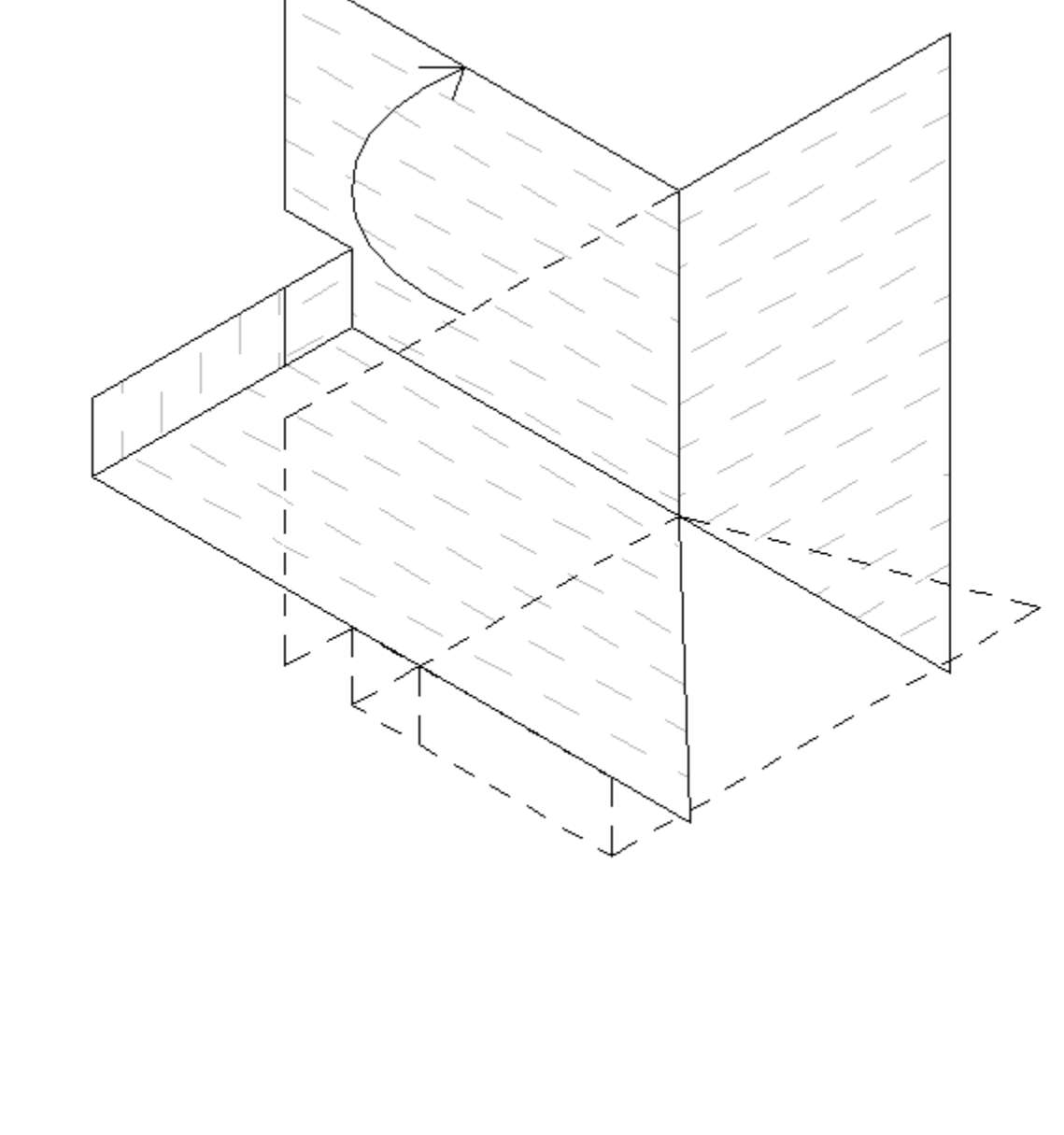

Peel-n-Stick

Fold Lines

Cut

Cut

Cut

Fold

Fold

Fold

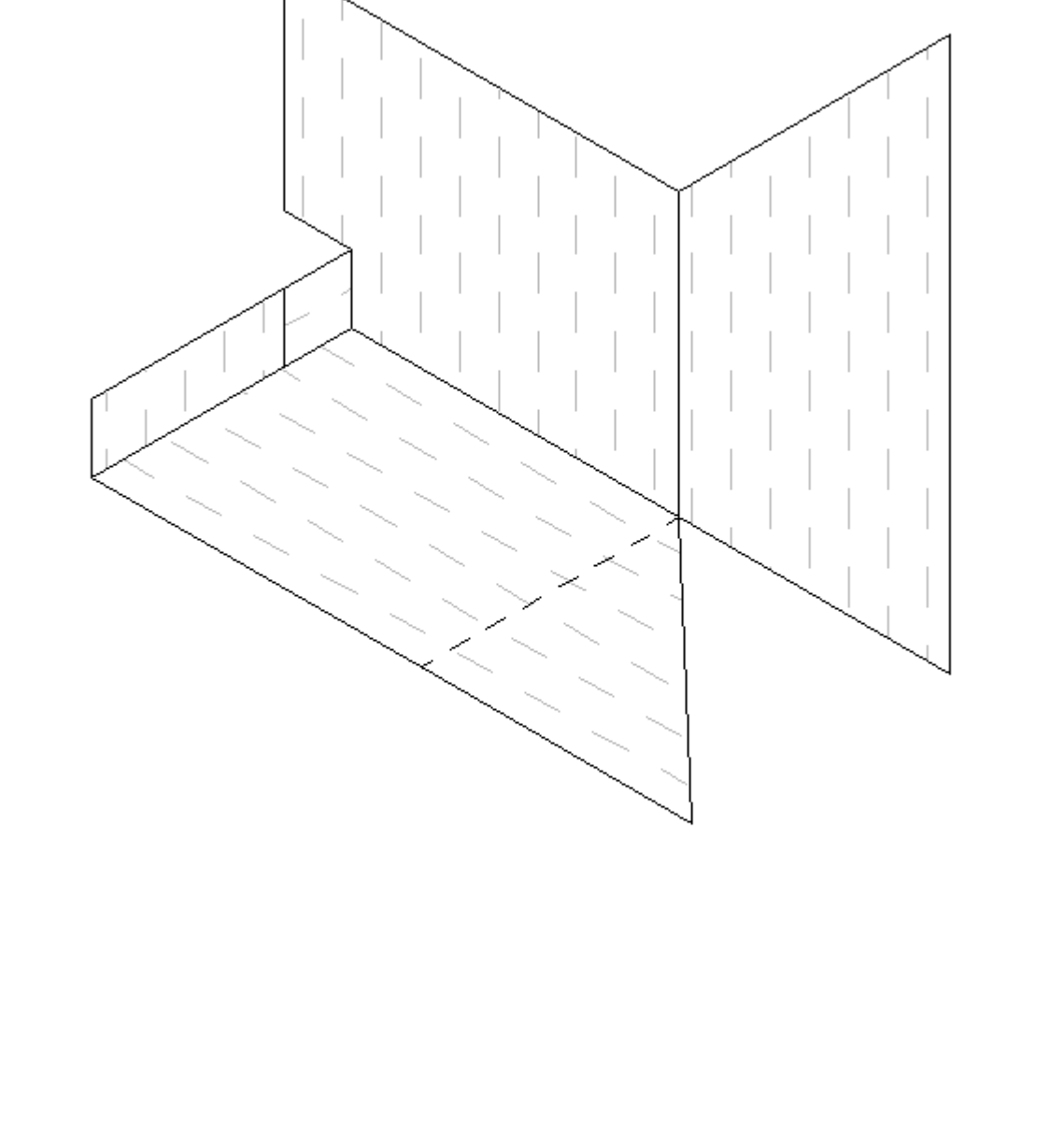

Peel-n-Stick

Fold Lines

Cut

Cut

Cut

Fold

Fold

Fold

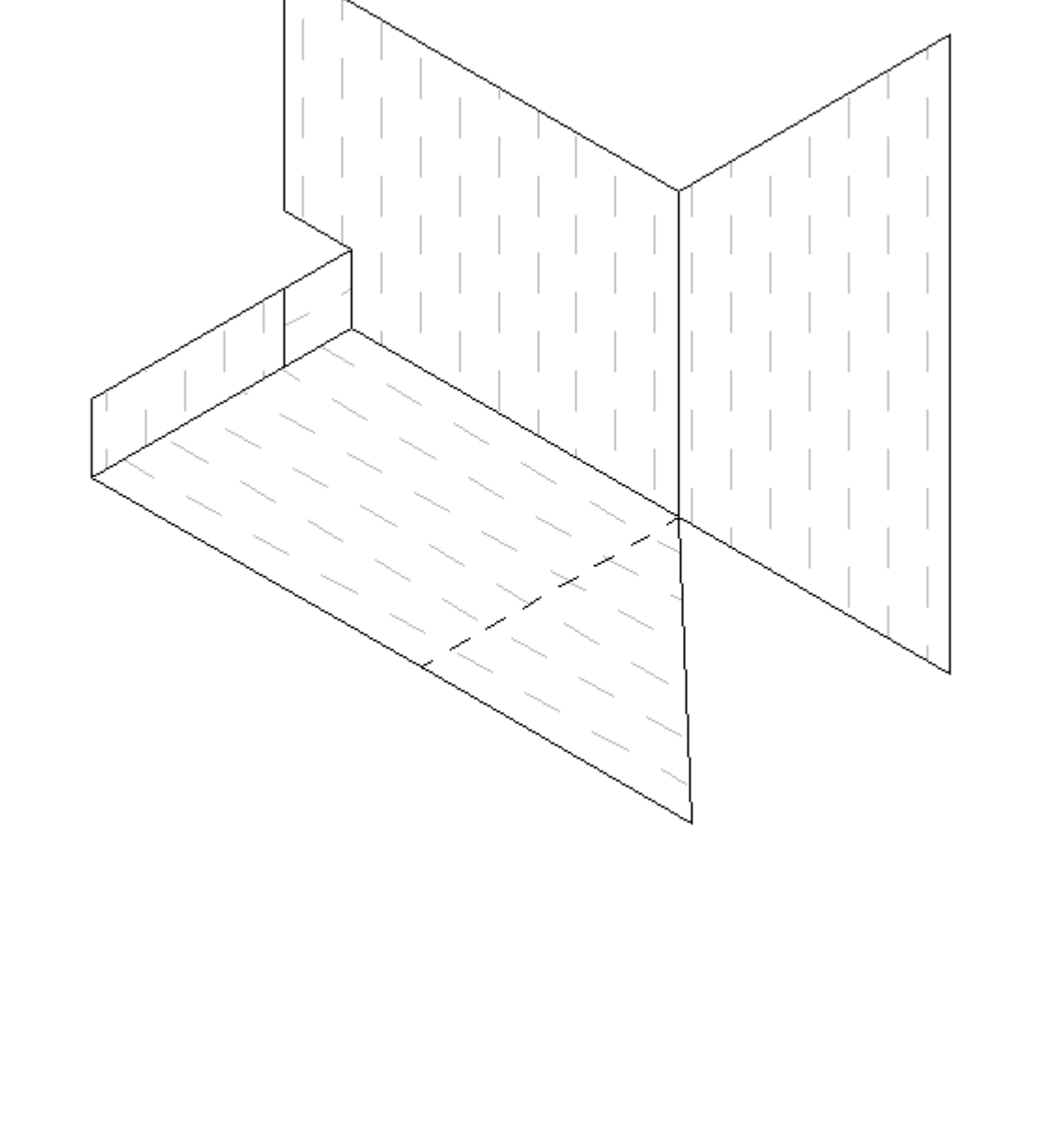

Peel-n-Stick

Fold Lines

Cut

Cut

Cut

Fold

Fold

Fold

Fold

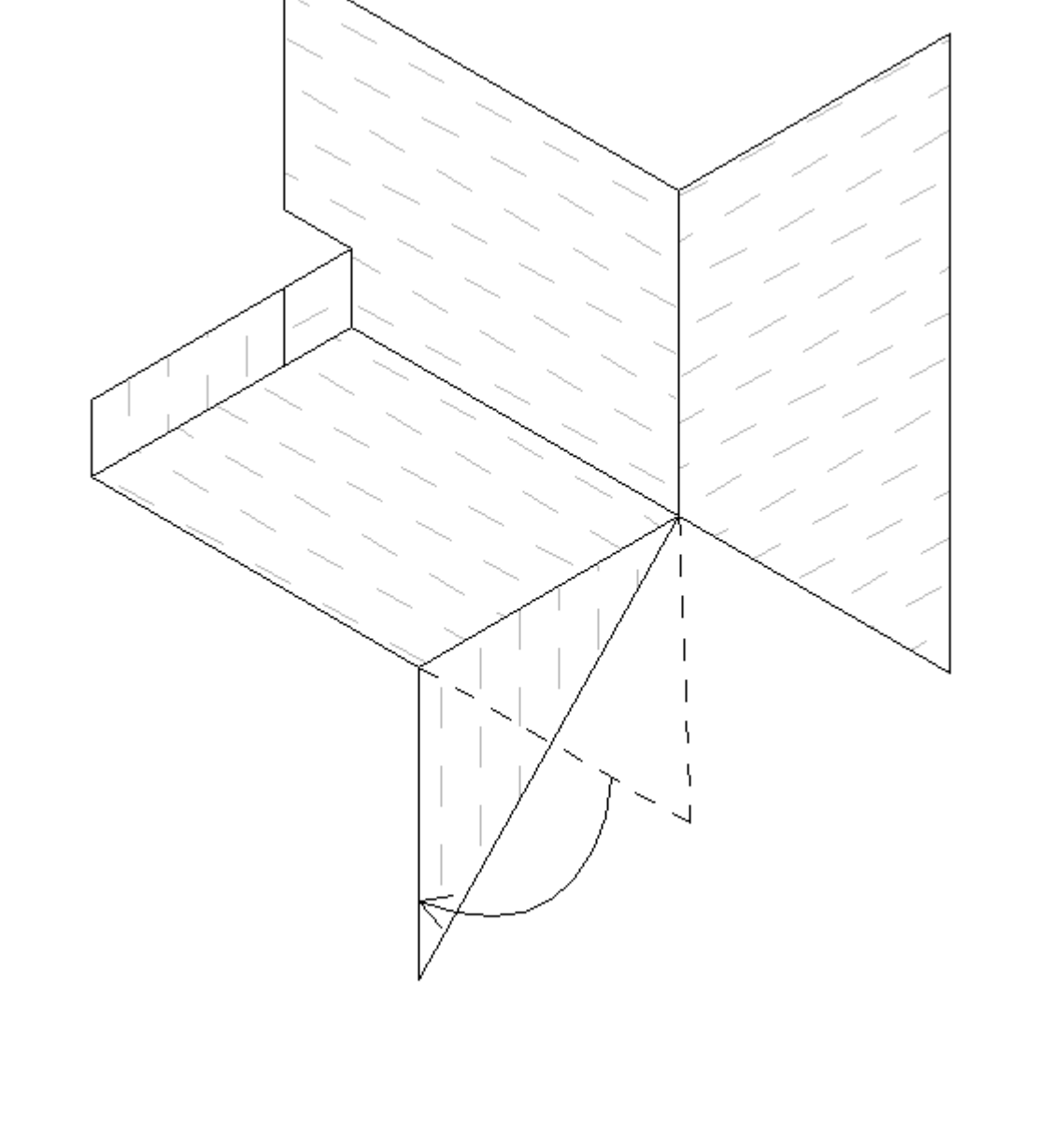

Peel-n-Stick

Fold Lines

Cut

Cut

Cut

Fold

Fold

Fold

Fold

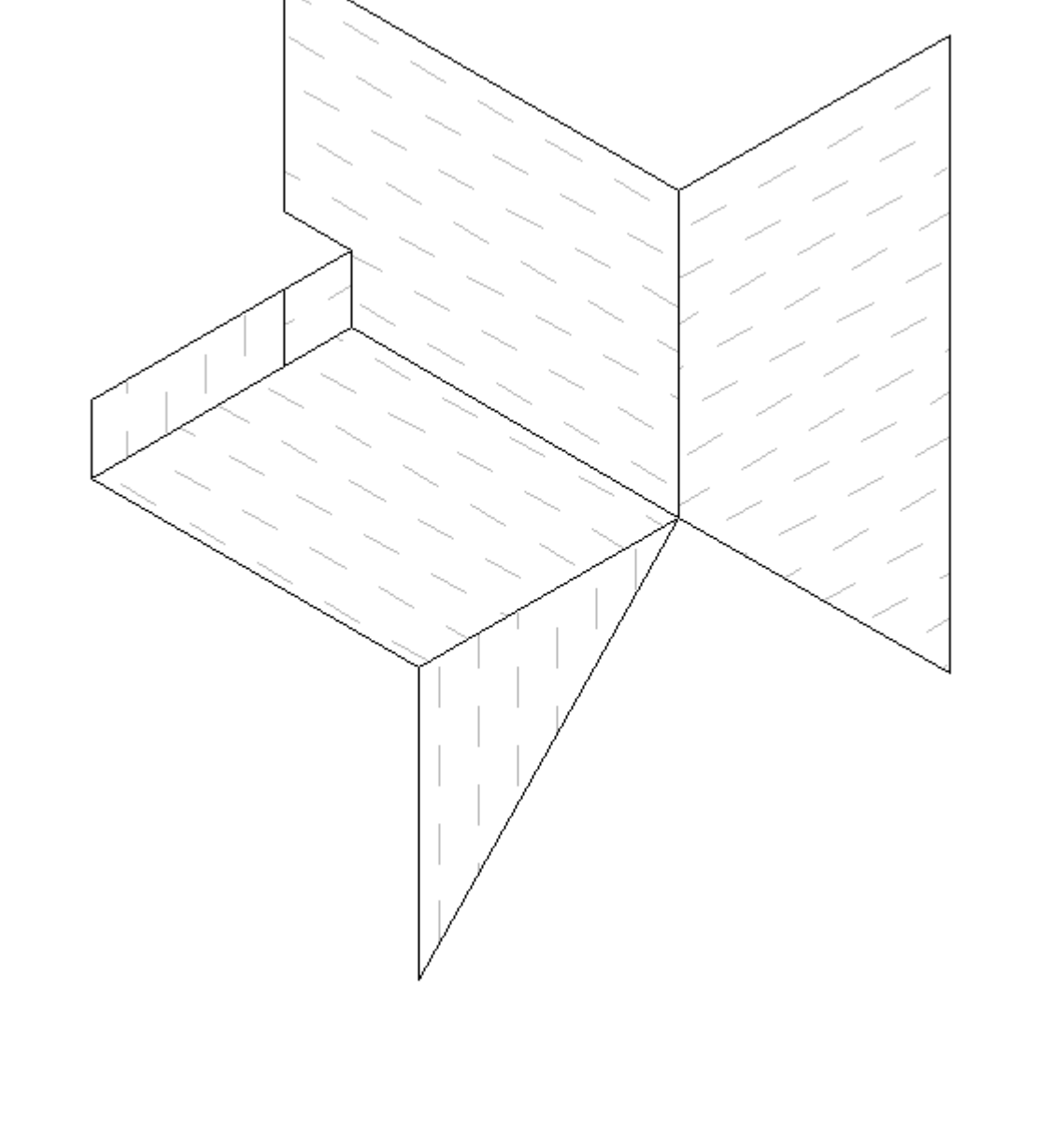

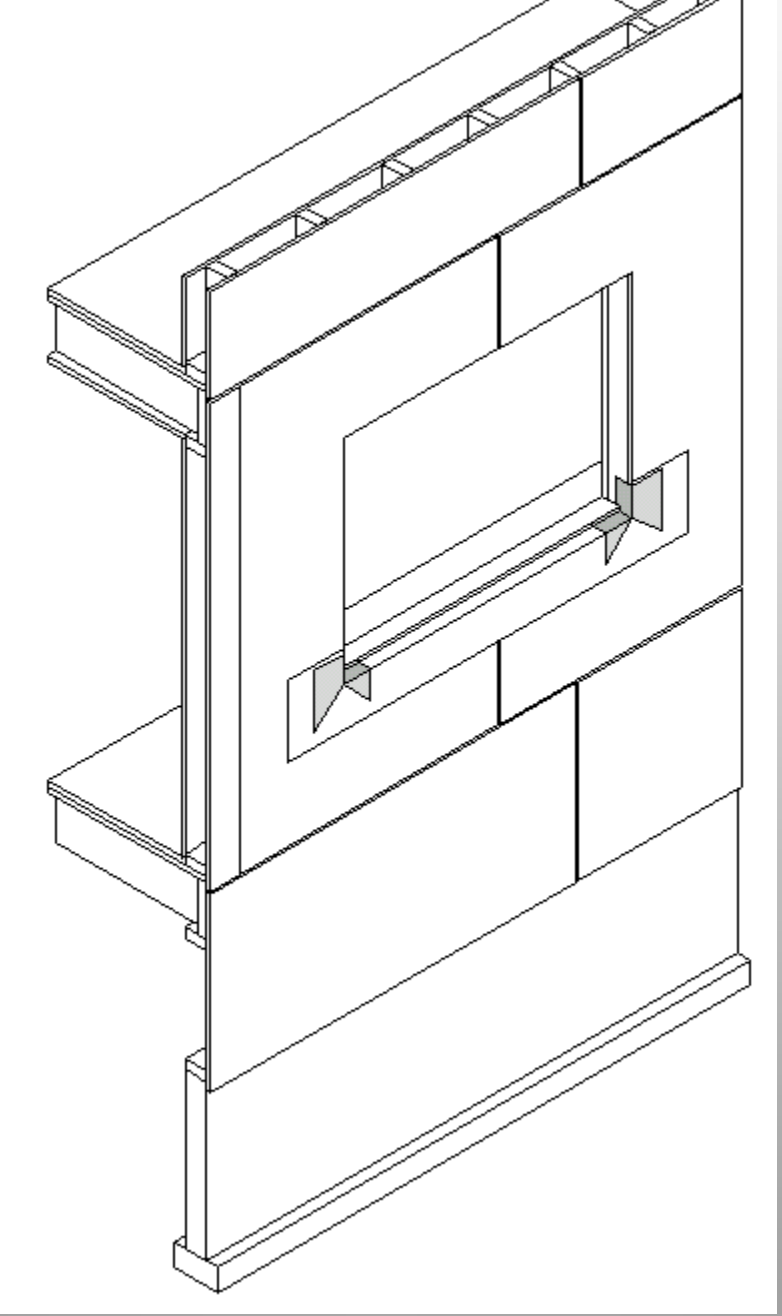

Liquid detailing membrane

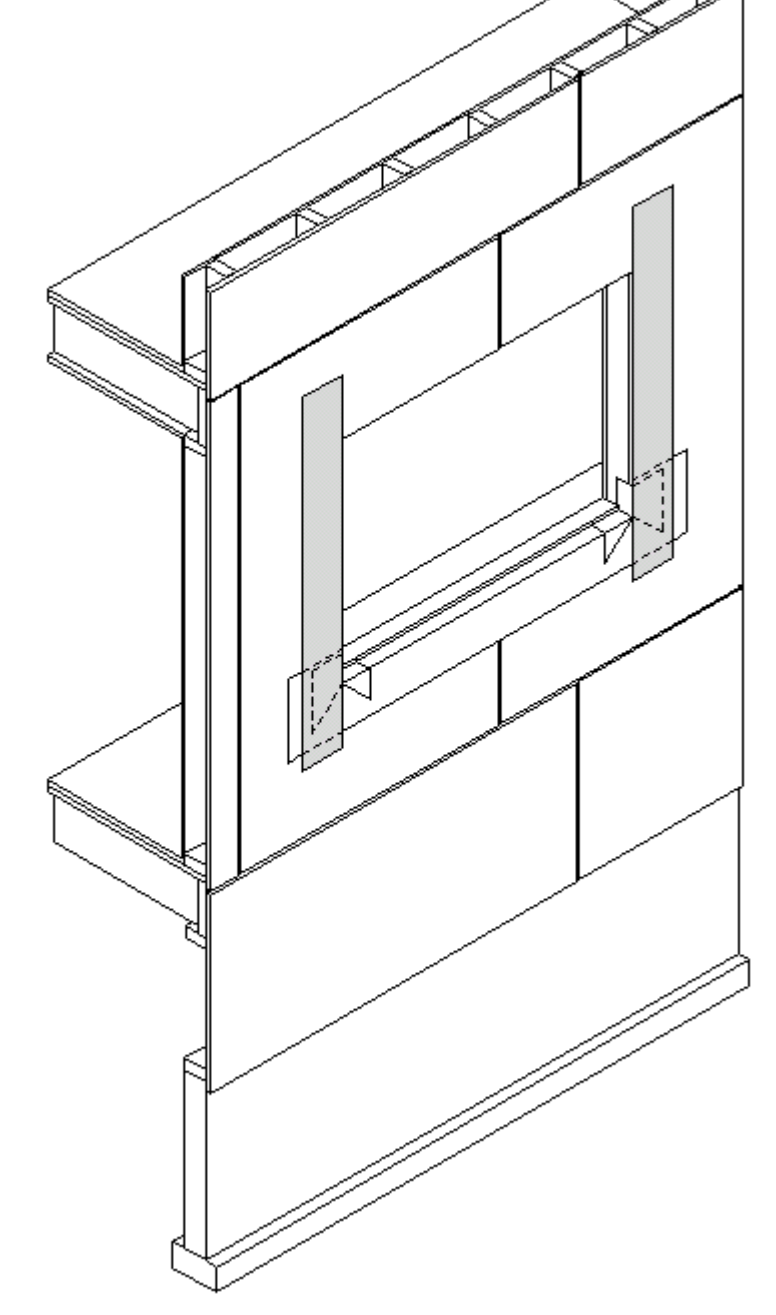

Liquid detailing membrane

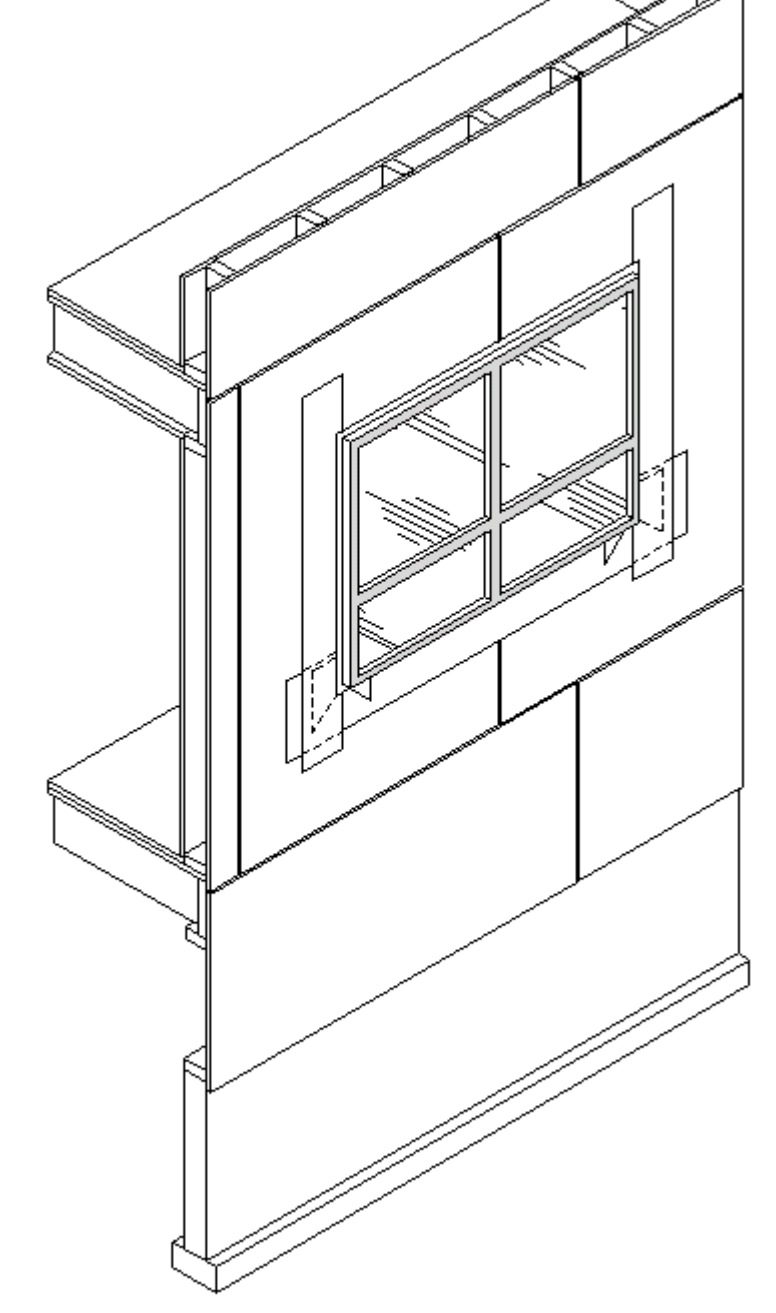

Liquid detailing membrane

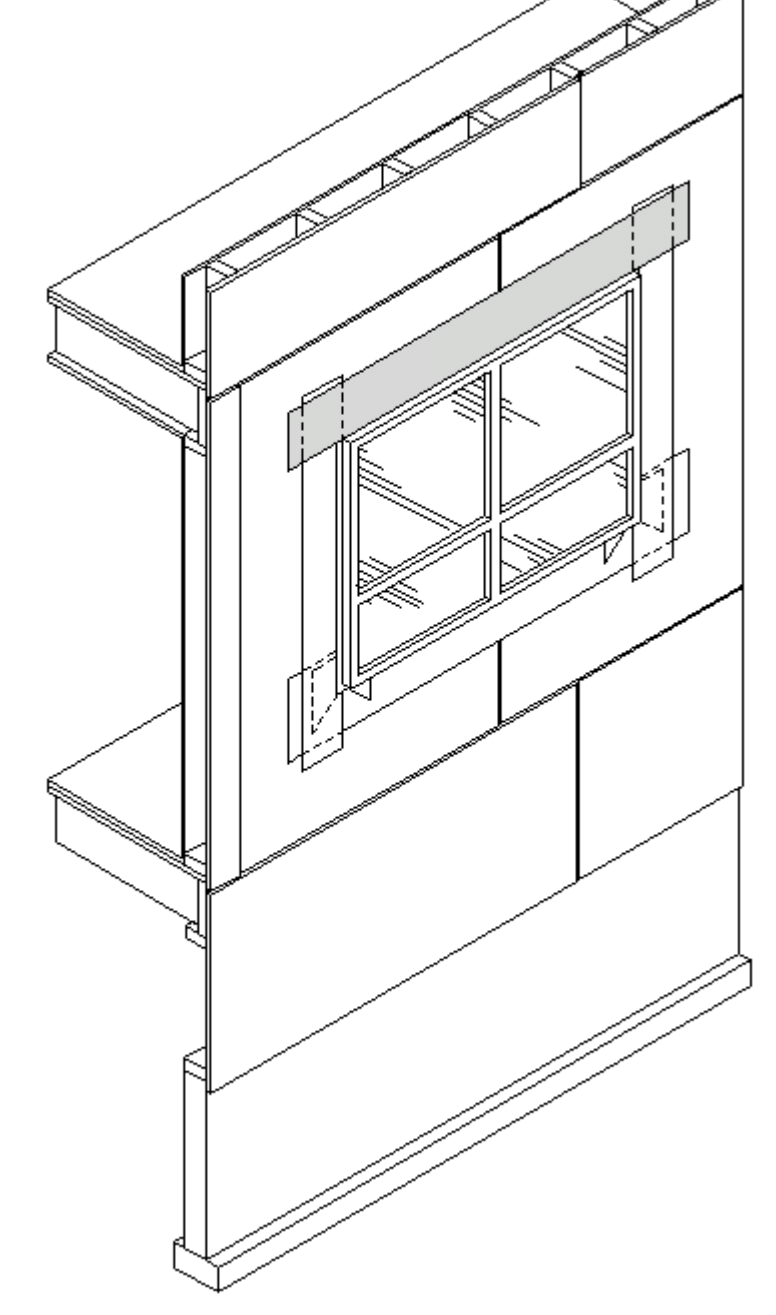

Liquid detailing membrane

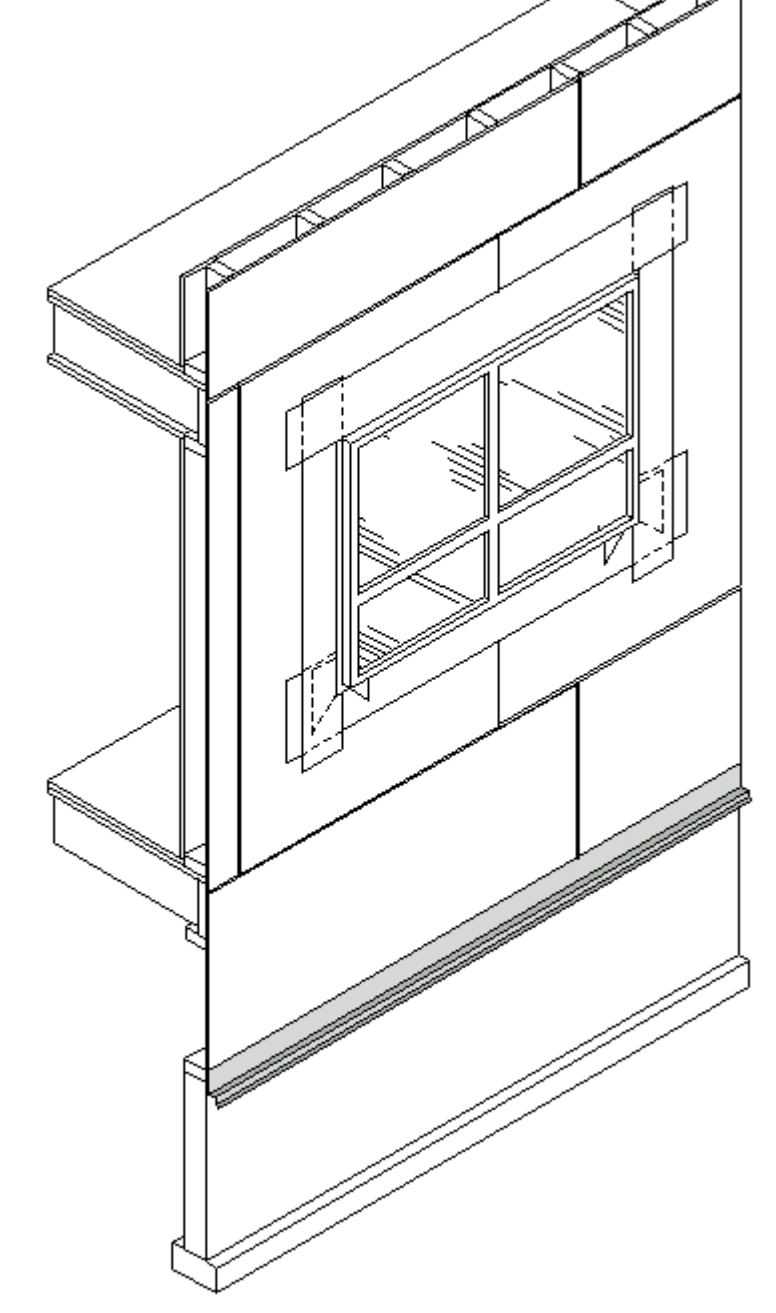

Liquid detailing membrane

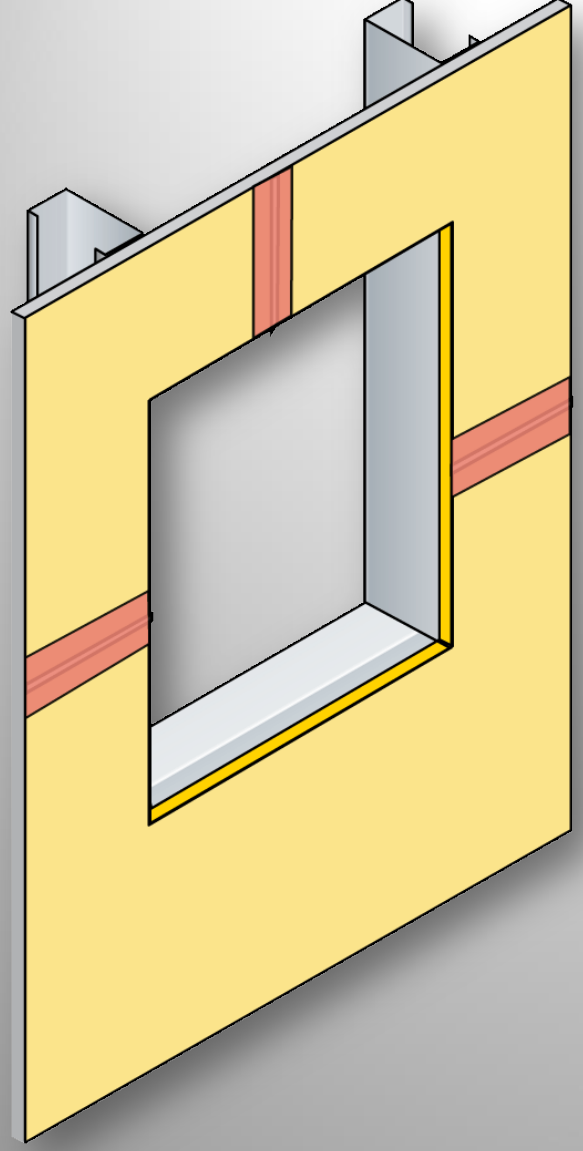

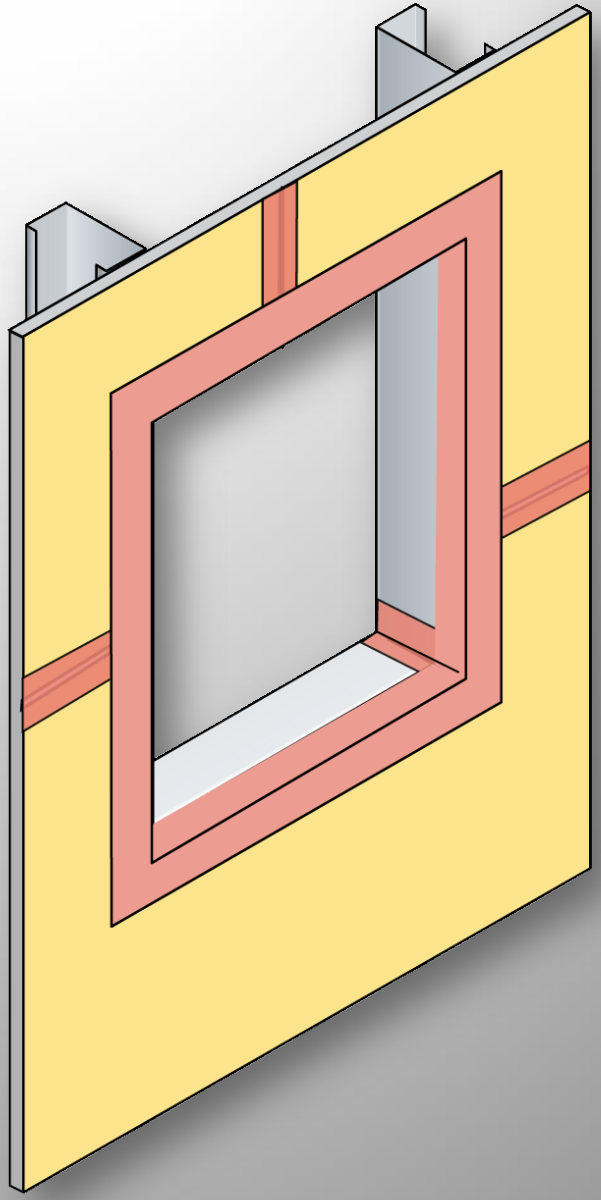

Liquid detailing membrane

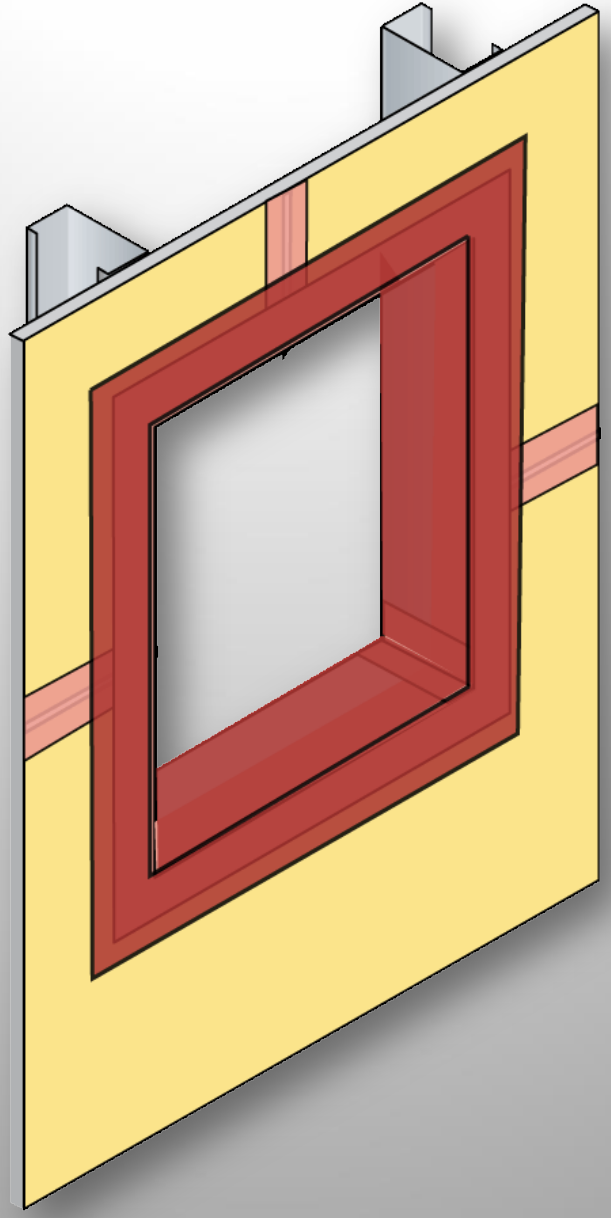

Liquid detailing membrane

STPE liquid pan and rough opening flashing

- Becoming commonly specified
- Recognized in Architectural Record
- Entering ASTM process

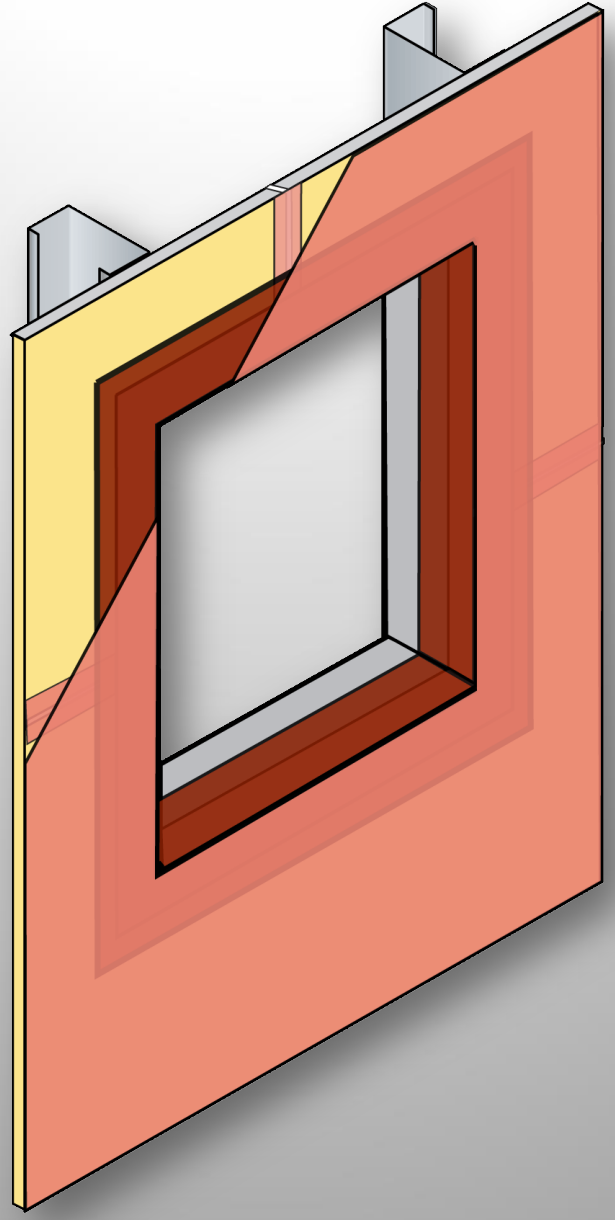

WRB / Air Barrier

Liquid detailing membrane

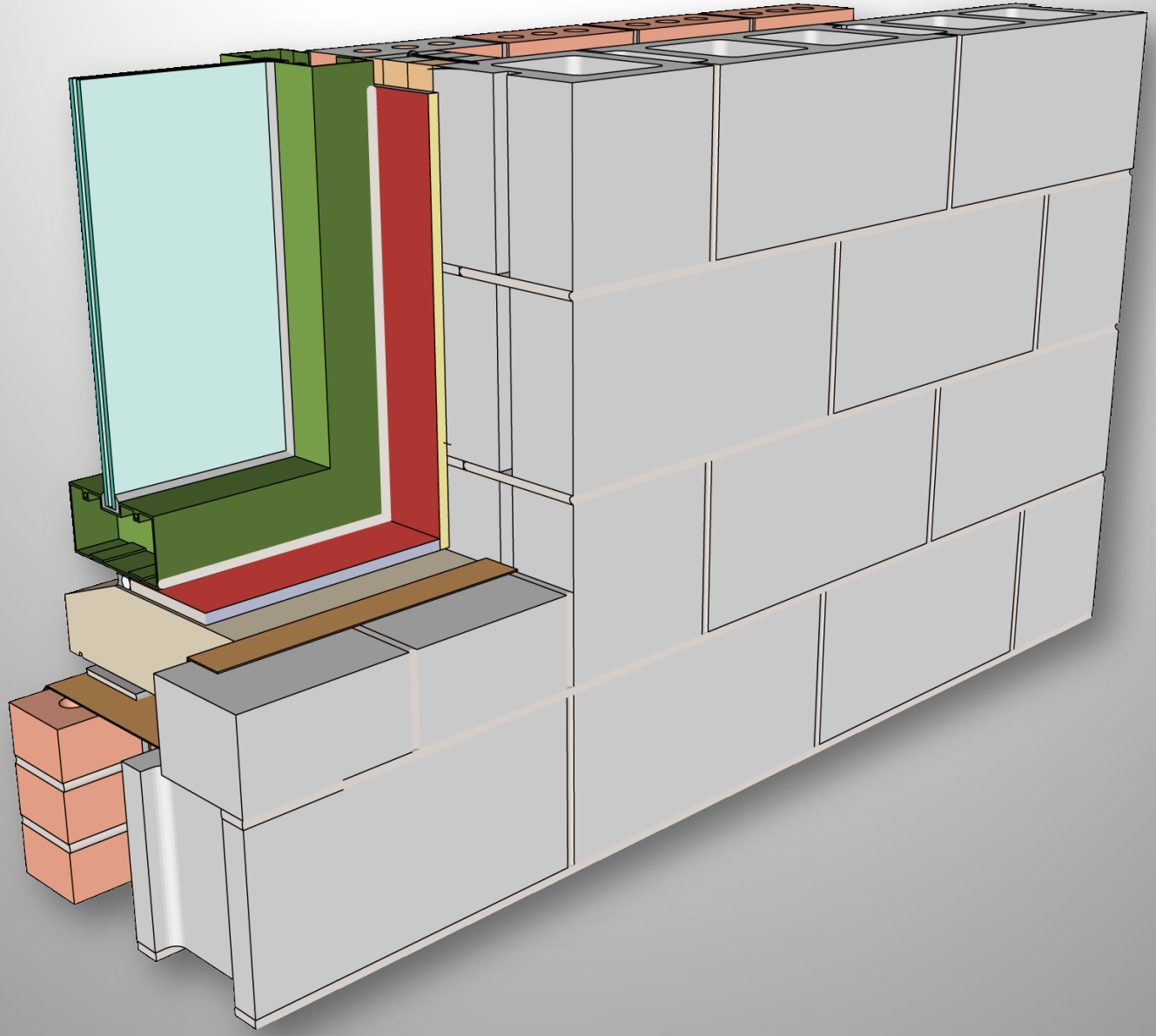

Liquid detailing membrane

Liquid detailing membrane

STPE -- Interior seal / sill flashing

"In addition to being specified by many manufacturers' installation instructions,

the use of an interior air seal is also becoming noted in reference standards.

We encourage installers and builders to take a second look at the potential advantages offered by installing an interior air seal…"

Pushing the Building Envelope

AAMA Standard Practice for the Installation of Windows and Doors in Commercial Buildings:

"Backer rod should be placed around the interior side of the window. Place sealant over the backer rod in a continuous manner."

Liquid detailing membrane

Liquid detailing membrane

Liquid detailing membrane

Liquid detailing membrane

Liquid detailing membrane

Liquid detailing membrane

Liquid detailing membrane

Liquid detailing membrane

Property	STPE	Urethane	Silicone
Environmental friendliness	10	5	9
Non-bubbling	10	6	10
Low temperature gunnability	10	8	10
Slump resistance	10	10	10
Quick cure	10	7	10
Storage stability	10	7	9
Body (tooling)	8	10	8
Weather resistance	8	6	10
Adhesion to various substrates	10	5	8
Mechanical properties	10	10	10
Heat resistance, mechanical stability	9	8	10
Non-dirt pickup	10	10	5
Stain resistance	8	8	5
Paintability with water-based paint	10	10	3
Scale: 10 – excellent; 1 – very poor	**133**	**110**	**117**

Adhesives & Sealants Council

"In addition to their high performance properties, these sealants are achieving popularity due to their formulation versatility that allows the customization of viscosity and early strength development for various applications. "

- “Silyl Terminate Poly Ethers for Sealants and Adhesives of a New Generation” -- Designed mainly for sealants and adhesives, and can also be used for coatings.

- “Novel STPE prepolymers have proven to be straight forward and flexible in their formulating characteristics allowing a large degree of freedom in formulating design space.”


share
00:12
06:11


Peel & Stick
flashing
share
59 LF rough opening treated
1 hr 13 min duration of application
65 LF product used
02:32
06:11

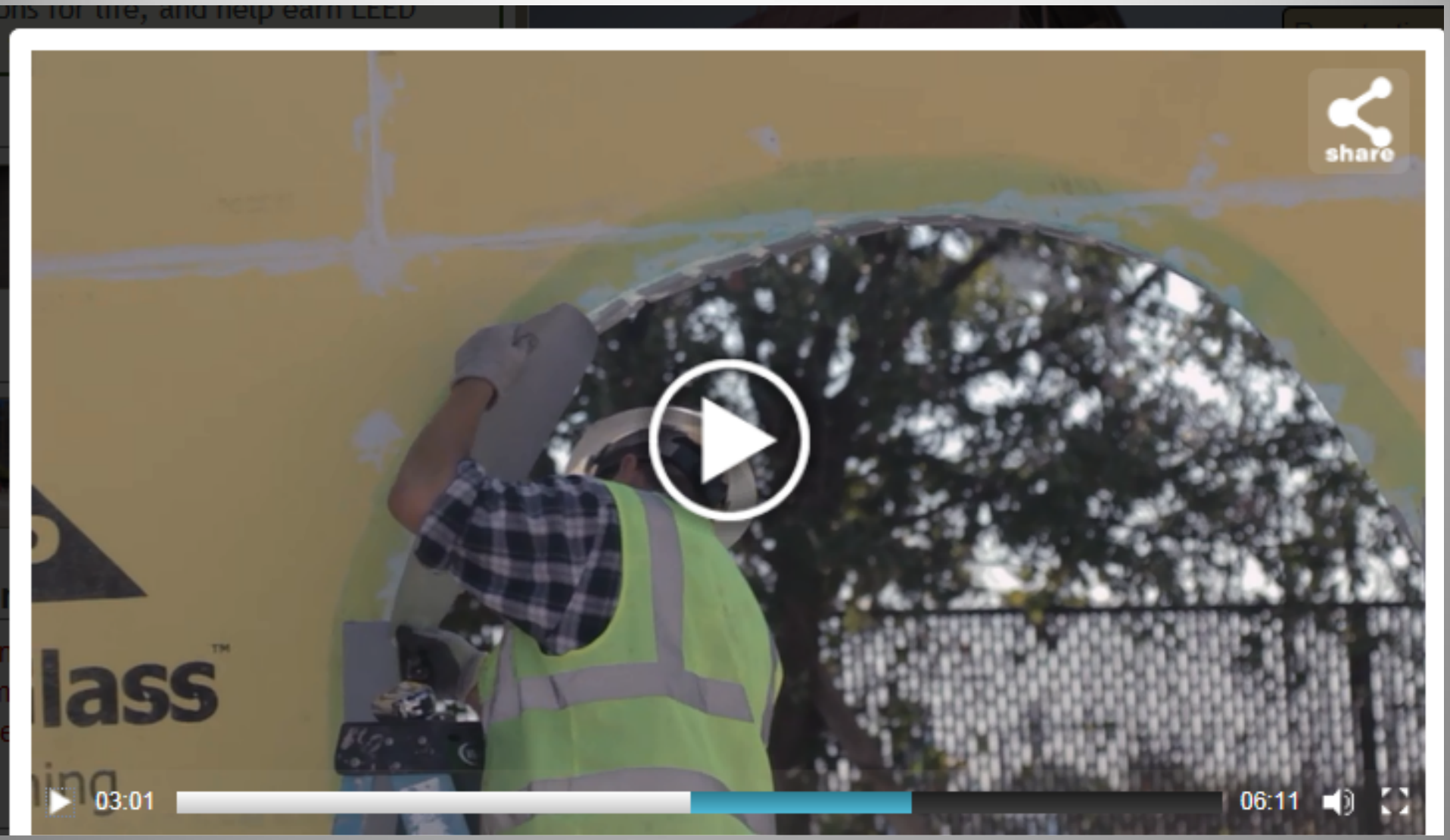
share
03:01
06:11


share
03:07
06:11


GP
share
02:49
06:11

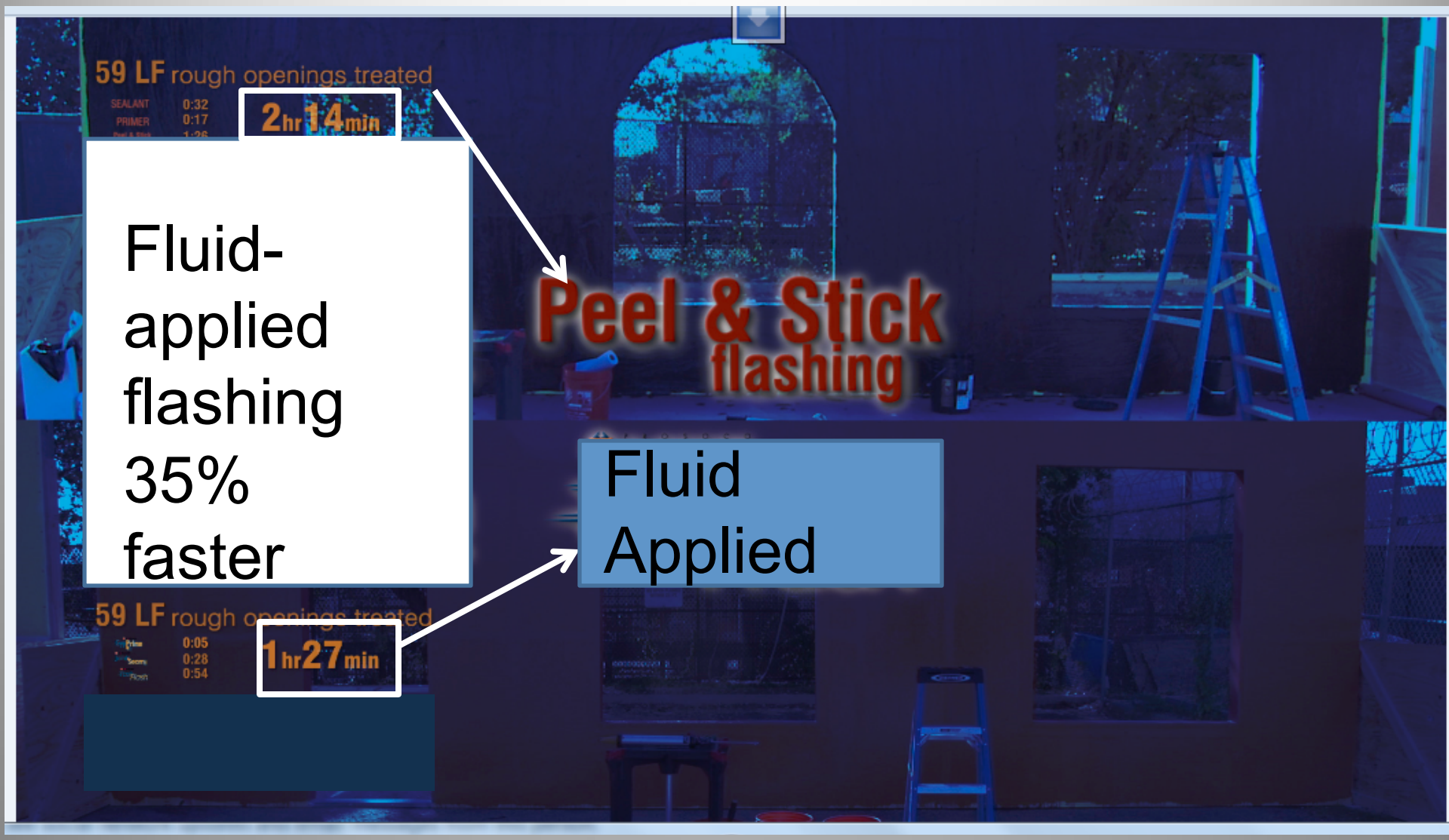

Fluid-applied flashing 35% faster

Fluid Applied

Code Council Testing WRB Air Barrier

ICC-ES AC212[1]
Acceptance Criteria for Water-Resistive Coatings Used as Water-Resistive Barriers Over Exterior Sheathing

Test	Method	Criteria	Results
Tensile Bond	ASTM C 297	Minimum 15 psi (105 kPa)	Pass
Freeze-Thaw	ICC-ES AC212	No cracking, checking, crazing, erosion, delamination or other deleterious effects	Pass
Water Resistance	ASTM D 2247	No cracking, checking, crazing, erosion, delamination, or other deleterious effects	Pass
Water Vapor Transmission	ASTM E 96 Wet Cup	Measure	18 perms
Water Penetration	ASTM E 331	No visible water penetration at the sheathing joints as viewed from the back of the panel	Pass
Structural, Racking, Restrained Environmental Conditioning & Water Penetration	ASTM E 1233 A ASTM E 72 ICC-ES AC212 ASTM E 331	No cracking of the coating	Pass
Weathering	ICC-ES AC212 AATCC[2] 127	No cracking of the coating; no water penetration	Pass
Air Permeance	ASTM E 2178	≤ 0.02 L / s·m² at 75 Pa (≤ 0.004 cfm / ft² at 1.57 psf)	Pass: 0.0009 L / s·m² at 75 Pa (0.00018 cfm / ft² at 1.57 psf)

Air Barrier Assoc. of America Testing

ABAA: Air Barrier Association of America Acceptance Criteria for Liquid Applied Membranes

Test	Method	Criteria	Results
Air Permeance	ASTM E 2178	≤ 0.02 L / s·m² at 75 Pa (≤ 0.004 cfm / ft² at 1.57 psf)	Pass: 0.0009 L / s·m² at 75 Pa (0.00018 cfm / ft² at 1.57 psf)
Air Leakage of Air Barrier Assemblies	ASTM E 2357	≤ 0.2 L / s·m² at 75 Pa (≤ 0.04 cfm / ft² at 1.57 psf)	Pass: 0.0105 L / s·m² at 75 Pa (0.0021 cfm / ft² at 1.57 psf)
Water Resistance	AATCC[2] 127	No water infiltration after exposure to 55 cm head of water for 5 hours	Pass
Fastener Sealability	ASTM D 1970	No water infiltration	Pass
Pull Adhesion	ASTM D 4541	110 kPa (16 psi) or substrate failure	Pass
ICC-ES AC212	Entire Suite of Tests	Pass	Pass
Crack Bridging	ASTM C 1305	Pass	Pass
Water Vapor Permeance at applied thickness	ASTM E 96	Report in Ng/(Pa•s•m²)	Wet: 1015 Ng/(Pa•s•m²) Dry: 860 Ng/(Pa•s•m²)

"Five years from now, what will we look back on as an important development in building envelope construction?"

The answer: "The replacement of peel-and-stick flashing membranes with fluid-applied flashing products."

This from panel member Alex Lukachko of a leading waterproofing and air-barrier consulting company **(Joe Lstiburek's** Building Science Corporation)

responding to an audience question at the

National Institute of Building Sciences, Building Enclosure Technology and Environment Council (BETEC), December, 2011 building envelope symposium in Washington, DC.

Liquid detailing membrane

The End